XM-PX3BU/XM-PX3TG

JVC

SERVICE MANUAL

PORTABLE MINIDISC PLAYER

XM-PX3BU
XM-PX3TG

Area Suffix	
UB --------	Hong Kong

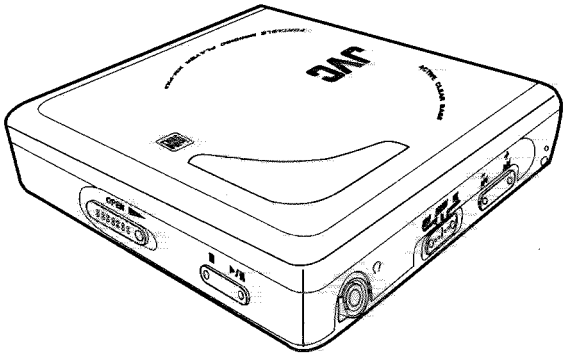

Contents

Safety Precautions ---------- 1-2
Attention when MD pickup is exchanged ---------- 1-3
Important for laser products ---------- 1-4
Instructions ---------- 1-5~8
Disassembly method ---------- 2-1
Adjustment method ---------- 2-5
Maintenance of MD pickup ---------- 2-6
Procedures of changing the MD pickup 2-6
Description of major ICs ---------- 2-7
Block diagram ---------- 2-21
Standard schematic diagram ---------- 2-23
Printed circuit board ---------- 2-24
Parts List ---------- 3-1~9

This service manual is made from 100% recycled paper.

COPYRIGHT © 2000 VICTOR COMPANY OF JAPAN, LTD.

No.20810
Feb. 2000

Safety Precautions

1. This design of this product contains special hardware and many circuits and components specially for safety purposes. For continued protection, no changes should be made to the original design unless authorized in writing by the manufacturer. Replacement parts must be identical to those used in the original circuits. Services should be performed by qualified personnel only.
2. Alterations of the design or circuitry of the product should not be made. Any design alterations of the product should not be made. Any design alterations or additions will void the manufacturer's warranty and will further relieve the manufacture of responsibility for personal injury or property damage resulting therefrom.
3. Many electrical and mechanical parts in the products have special safety-related characteristics. These characteristics are often not evident from visual inspection nor can the protection afforded by them necessarily be obtained by using replacement components rated for higher voltage, wattage, etc. Replacement parts which have these special safety characteristics are identified in the Parts List of Service Manual. Electrical components having such features are identified by shading on the schematics and by (⚠) on the Parts List in the Service Manual. The use of a substitute replacement which does not have the same safety characteristics as the recommended replacement parts shown in the Parts List of Service Manual may create shock, fire, or other hazards.
4. The leads in the products are routed and dressed with ties, clamps, tubings, barriers and the like to be separated from live parts, high temperature parts, moving parts and/or sharp edges for the prevention of electric shock and fire hazard. When service is required, the original lead routing and dress should be observed, and it should be confirmed that they have been returned to normal, after re-assembling.
5. Leakage currnet check (Electrical shock hazard testing)
   After re-assembling the product, always perform an isolation check on the exposed metal parts of the product (antenna terminals, knobs, metal cabinet, screw heads, headphone jack, control shafts, etc.) to be sure the product is safe to operate without danger of electrical shock.
   Do not use a line isolation transformer during this check.
   - Plug the AC line cord directly into the AC outlet. Using a "Leakage Current Tester", measure the leakage current from each exposed metal parts of the cabinet , particularly any exposed metal part having a return path to the chassis, to a known good earth ground. Any leakage current must not exceed 0.5mA AC (r.m.s.)
   - Alternate check method
     Plug the AC line cord directly into the AC outlet. Use an AC voltmeter having, 1,000 ohms per volt or more sensitivity in the following manner. Connect a 1,500Ω 10W resistor paralleled by a 0.15μF AC-type capacitor between an exposed metal part and a known good earth ground.
     Measure the AC voltage across the resistor with the AC voltmeter.
     Move the resistor connection to eachexposed metal part, particularly any exposed metal part having a return path to the chassis, and meausre the AC voltage across the resistor. Now, reverse the plug in the AC outlet and repeat each measurement. voltage measured Any must not exceed 0.75 V AC (r.m.s.). This corresponds to 0.5 mA AC (r.m.s.).

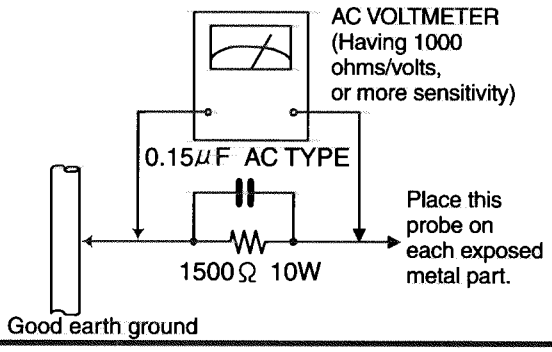

Warning

1. This equipment has been designed and manufactured to meet international safety standards.
2. It is the legal responsibility of the repairer to ensure that these safety standards are maintained.
3. Repairs must be made in accordance with the relevant safety standards.
4. It is essential that safety critical components are replaced by approved parts.
5. If mains voltage selector is provided, check setting for local voltage.

⚠ ***CAUTION*** **Burrs formed during molding may be left over on some parts of the chassis. Therefore, pay attention to such burrs in the case of preforming repair of this system.**

Attention when MD pickup is exchanged

1. About the static electricity protection measures

The laser diode in the traverse unit (optical pick up) is easy to be destroyed by clothes and the human body to the electrified static electricity.
Please note the explosion by static electricity when repairing.

2. About the earth processing for the electrostatic destruction prevention

In the equipment which uses an optical pick up (laser diode), an optical pick up is destroyed by the static electricity of the work environment.
Please do the earth processing and work.

1) Earth of work stand
Please pull the conductive material (conductive sheet) or the iron plate to the depository place of the traverse unit (optical pick up), and take the earth to ground.
2) Human body earth
Please use the anti-static wrist strap to exhaust the electrified static electricity to the human body.

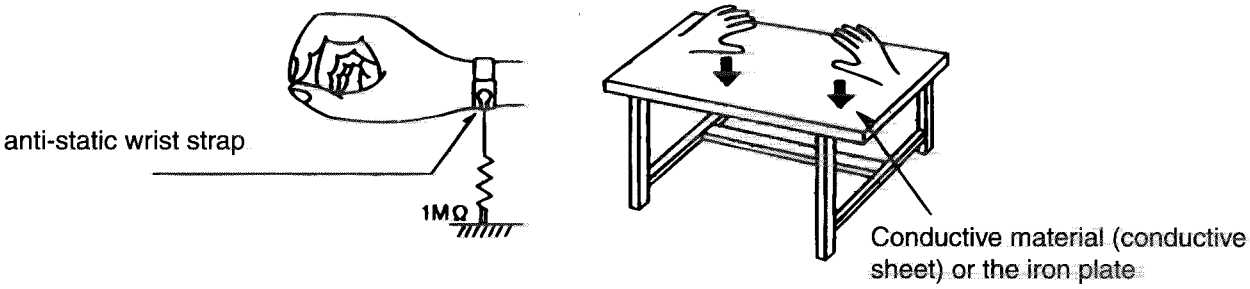

3. Handling the optical pick up

1) Please return according to a correct procedure based on short processing after exchanging parts.
2) Do not use a tester to check the condition of the laser diode in the optical pick up .The tester 's internal power source can easily destroy the laser diode.

4. Attention when unit is disassembled

Please refer to "Disassembling method" for how to detach .

1) Please be sure to solder before a flexible wire is removed from connector CN301 on a main printed circuit board as shown in Figure 2.
if you removes without soldering.the MD picking up assembly might destroy
2) When installing , solder in the part of short round should be removed after a flexible wire is connected with CN301

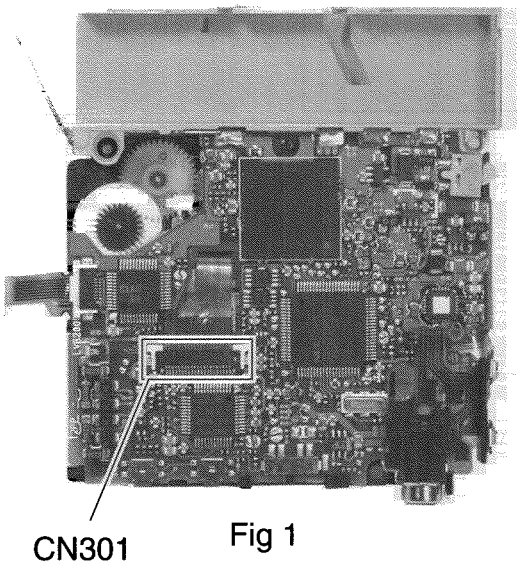

Fig 1

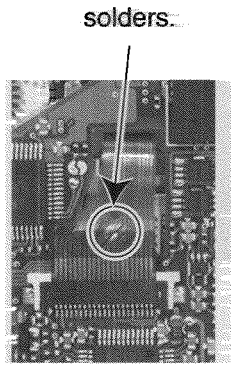

Fig 2

Important for laser products

1.CLASS 1 LASER PRODUCT

2.DANGER : Invisible laser radiation when open and inter lock failed or defeated. Avoid direct exposure to beam.

3.CAUTION : There are no serviceable parts inside the Laser Unit. Do not disassemble the Laser Unit. Replace the complete Laser Unit if it malfunctions.

4.CAUTION : The compact disc player uses invisible laserradiation and is equipped with safety switches whichprevent emission of radiation when the drawer is open and the safety interlocks have failed or are de feated. It is dangerous to defeat the safety switches.

5.CAUTION : If safety switches malfunction, the laser is able to function.

6.CAUTION : Use of controls, adjustments or performance of procedures other than those specified herein may result in hazardous radiation exposure.

⚠ ***CAUTION*** **Please use enough caution not to see the beam directly or touch it in case of an adjustment or operation check.**

VARNING : Osynlig laserstrålning är denna del är öppnad och spärren är urkopplad. Betrakta ej strålen.

VARO : Avattaessa ja suojalukitus ohitettaessa olet alttiina näkymättömälle lasersäteilylle.Älä katso säteeseen.

ADVARSEL : Usynlig laserstråling ved åbning , når sikkerhedsafbrydere er ude af funktion. Undgå udsættelse for stråling.

ADVARSEL : Usynlig laserstråling ved åpning,når sikkerhetsbryteren er avslott. unngå utsettelse for stråling.

REPRODUCTION AND POSITION OF LABELS

WARNING LABEL

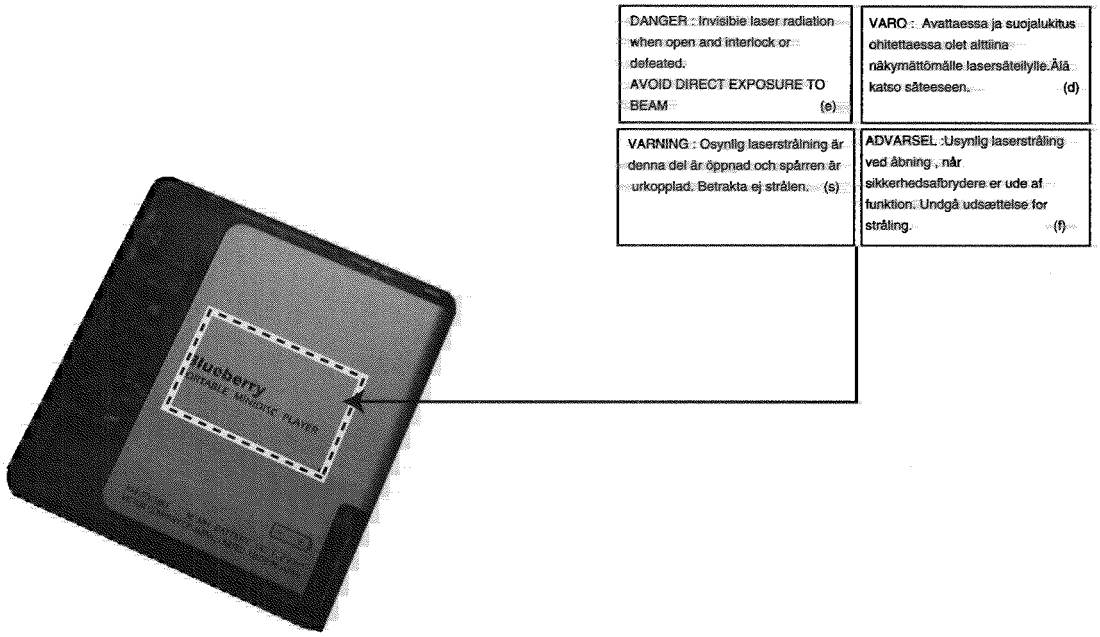

Instructions

JVC

PORTABLE MINIDISC PLAYER

ENGLISH

XM-PX3BU/TG

INSTRUCTIONS

LVT0488-007A[UB/US/UY]

Supplied Accessories

Check the packing carton for these accessories.

AC adaptor (AA-R9020)	1 pc.	Rechargeable nickel metal hydride battery (BN-R1210)	1 pc.
Headphones	1 pc.	Carrying pouch	1 pc.
Wired remote control	1 pc.	AC Plug Adaptor (only for Singapore)	1 pc.
Charger (AC-R126)	1 pc.		

*Use numbers indicated in parentheses when asking for replacement parts.

Thank you for purchasing this JVC product. Please read these instructions carefully before starting operation to be sure to obtain optimum performance and a longer service life from your minidisc player.

CAUTION!
THIS PRODUCT UTILIZES A LASER.
USE OF CONTROLS OR ADJUSTMENTS OR PERFORMANCE OF PROCEDURES OTHER THAN THOSE SPECIFIED HEREIN MAY RESULT IN HAZARDOUS RADIATION EXPOSURE.
DO NOT OPEN COVERS AND DO NOT REPAIR YOURSELF. REFER SERVICING TO QUALIFIED PERSONNEL.

WARNING:
TO REDUCE THE RISK OF FIRE OR ELECTRIC SHOCK, DO NOT EXPOSE THIS APPLIANCE TO RAIN OR MOISTURE.

CAUTION:
AC adaptor (AA-R9020), Charger (AC-R126) and rechargeable Ni-MH battery (BN-R1210 and BN-R127) are audio equipments for XM-PX3 only.

WARNING LABEL, PLACED INSIDE THE UNIT

CLASS 1 LASER PRODUCT

1. CLASS 1 LASER PRODUCT
2. **DANGER:** Invisible laser radiation when open and interlock failed or defeated. Avoid direct exposure to beam.
3. **CAUTION:** Do not open the top cover. There are no user serviceable parts inside the Unit; leave all servicing to qualified service personnel.

DANGER: Invisible laser radiation when open and interlock failed or defeated. AVOID DIRECT EXPOSURE TO BEAM. (e)

VARNING: Osynlig laserstrålning när denna del är öppnad och spärren är urkopplas. Betrakta ej strålen. (s)

ADVARSEL: Usynlig laserstråling ved åbning, når sikkerhedsafbrydere er ude af funktion. Undgå udsættelse for stråling. (d)

VARO: Avattaessa ja suojalukitus siitettaessa olet alttiina näkymättömälle säteilylle. Ä ä katso säteeseen. (f)

Power Supply Preparations

Using the rechargeable Ni-MH battery (included)

1 Remove the rechargeable battery from its case.

2 Insert the rechargeable battery into the charger.

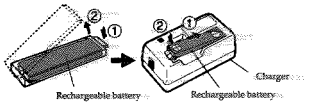

3 Connect the AC adaptor to the charger.

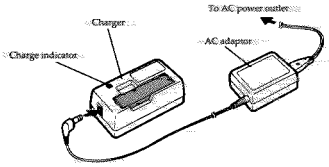

4 The charge indicator will initially light red. It will go out when recharging is completed. When recharging is complete, unplug the AC adaptor from the AC outlet and the charger.

5 Remove the recharged battery from the charger and insert it into the minidisc player.

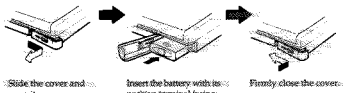

Notes:
- It takes approximately 2 hours to recharge the rechargeable battery.
- The rechargeable battery has a service life of approximately 300 charge-discharge cycles. If the operating time on one full charge becomes noticeably shorter than it used to be, the battery has reached the end of its service life and should be replaced.
- The AC adaptor and rechargeable battery may become warm while recharging. This is not a malfunction.
- When recharging the rechargeable battery which was left unused for a long time, the charge indicator may not light immediately. It will light in a few minutes.

Accidental Operation Prevention Function (Hold Mode)

This function prevents the minidisc player from operating accidentally.
Both the minidisc player and the remote control have HOLD switches, each of which works independently.

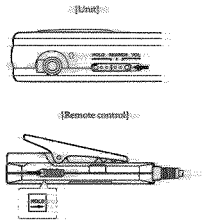

When the minidisc player is in HOLD mode, no button operation is possible for either the minidisc player unit or its remote control.
To operate the minidisc player or remote control normally, switch off the HOLD mode.

Maintenance

Unit:
Wipe the unit and remote control with a soft cloth. Remove stubborn dirt using a cloth which has been dipped in water (or soapy water) and wring out. Then wipe them dry.
- If you intend to use a chemically treated cleaning cloth, read its directions first.
- Do not use alcohol or paint thinners.

MDs:
If the MD cartridge is dirty wipe it with a damp cloth and then wipe dry.

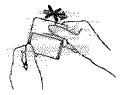

When storing MDs, avoid locations which are
- Exposed to direct sunlight.
- Susceptible to high levels of humidity or dust.
- Directly exposed to heat from a heating appliance.
- On top of a car dashboard or near the rear window.

Handling the MDs
- Do not open the shutter. The shutter is usually locked to prevent opening. Do not force in to open, or the disc may be destroyed.

Location of Controls

[Minidisc Player Unit]

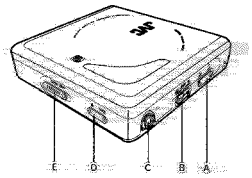

[Remote Control]

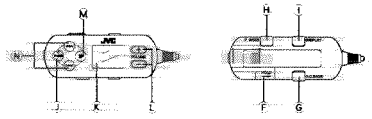

[Indicators on the remote control display]

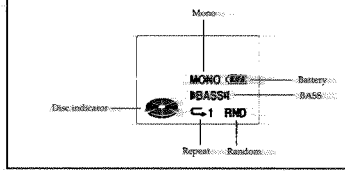

A: **VOLUME and SKIP / SEARCH button**
B: **HOLD / SEARCH / VOLUME Mode switch**
C: **Headphones jack (🎧)**
D: **Stop / Play / Pause button (■ ► /II)**
E: **OPEN knob**
F: **HOLD switch**
G: **A.C.BASS (Active Clear Bass) button**
H: **P.MODE (Play mode) button**
I: **DISPLAY button**
J: **Play / Pause button (►/II)**
K: **Display**
L: **VOLUME button (+, –)**
M: **Stop button (■)**
N: **Skip / SEARCH button (⏮ ⏭)**

Cautions

Batteries

- Before replacing batteries, always turn the minidisc player off.

Rechargeable Ni - MH battery :
- Use only the rechargeable battery BN-R1210 (supplied) or BN-R127 (not supplied) with this minidisc player.
- If the power delivered by the battery lasts for a very short time after recharging, it means that the battery's service life is over. Do not use it any more.
- Recharging an already charged battery will shorten its service life.
- When recharging a battery for the first time, or when it has not been used for a long period of time, the play time may be shorter than usual. In a case like this, repeatedly recharge and discharge the battery. This will restore it to its regular state.
- Do not allow any metal objects to touch the terminals of the rechargeable battery because this may cause dangerous short-circuiting.
- Recharge the battery at a temperature of 10°C to 35°C.

Rechargeable battery:
To prevent damage to the battery, and to avoid electrolyte leakage, heed the following instructions.
- Align the ⊕ and ⊖ polarities properly when inserting the batteries.
- Remove the batteries if you do not plan to use the minidisc player for a long period of time.
- Do not expose the batteries to open flame, and do not short-circuit, disassemble, or subject them to excessive heat.

Carrying batteries:
- When putting rechargeable battery in a pocket or bag, ensure that no other metal objects, such as necklaces or coins, are placed together with them. Contact with metal may cause short-circuiting which, in turn, may cause a fire.
- Be absolutely sure to carry the rechargeable battery in the battery carrying case.

Recycling Notice
The rechargeable battery is designated recyclable.
Please follow your local recycling regulations.

AC adaptor and charger

- Handle the AC adaptor and charger carefully. Improper handling is dangerous.
  - Do not touch them with wet hands.
  - Do not place heavy objects on top of them.
  - Do not forcibly bend them.
- Be sure to use only the AC adaptor and charger provided with this minidisc player.
- Disconnect the AC adaptor from the power outlet if the unit is not going to be used for a long time.

Minidisc Player Unit

- Do not alter or remodel the unit as this can cause malfunctioning.
- Do not alter or impact the unit as this may damage it.
- Avoid using the unit in the following locations since they can cause malfunctioning.
- Do not bring a cellular phone close to the minidisc player as it may cause noise or malfunction.
  1. Bathrooms and other moisture-prone places.
  2. Warehouses and other dusty places.
  3. Very hot places near heating appliances, etc.
- Do not leave the unit exposed to direct sunlight for long periods of time as this may deform or discolor the cabinet and may also cause malfunctioning.

Precautions for listening with the headphones

- Do not play your headset at a high volume. Hearing experts advise against continuous extended play.
- If you experience a ringing in your ears, reduce volume or discontinue use.
- Do not use while operating a motorized vehicle. It may create traffic hazard and is illegal in many areas.
- You should use extreme caution or temporarily discontinue use in potentially hazardous situations.
- Even if your headphones are an open-air type designed to let you hear outside sounds, don't turn up the volume so high that you can't hear what's around you.

When driving a car

- In the interest of traffic safety, do not use the minidisc player while driving a vehicle.

Battery Indicator

The battery indicator appears on the remote control display. When the indicator appears as below, power will be shut off a short while after.
Rechargeable battery: Recharge it.

Note:
- The battery indicator appears when an MD is loaded into the minidisc player.

Normal Play

ENGLISH

Follow the numbers in the figure to the right.

1 Connect the headphones plug firmly.

2 Connect the remote control plug firmly.

3 Make sure the switches on the unit and remote control are not on HOLD setting.

4 Load an MD.

- Slide the OPEN switch to open the lid.
- Open the lid by hand.
- Insert the MD into the MD slot beneath the lid, with its label side facing up. Insert the MD until it stops. Be sure the ⇗ or ⇖ mark on the MD aligns as shown in the figure.
- Close the lid.

"HELLO" appears on the remote control display. Then the track number and playback time appear.

5 Adjust the volume level between 0 and 25.

Press the Volume (+, –) button on the unit or the remote control.

6 Press the ►/II button.

Playback starts from the first track and ends after playing all the tracks on the MD.

Playing time

The disc indicator rotates Number of tracks being played

Notes:

- Insert the MD in the way that it will not touch the catch. If the catch is bent for some reason, the lid may not be closed properly.
- When opening the lid, please hold it by the edge when an MD is already loaded.
- If no MD is loaded, "No Disc" appears on the display, and the power will automatically shut off after approx. 10 seconds.
- If the MD is recorded in Monaural mode, "MONO" will appear on the display.
- To eject the MD, slide the OPEN switch and open the lid by hand. The MD will then come out.
- When the remote control is connected, the power may automatically turn on. However, if left as it is, it will eventually turn off automatically.
- This MD Player has a 40 second sound-skip-guard memory function to accomodate any shocks. Consequently, it can be used while walking.

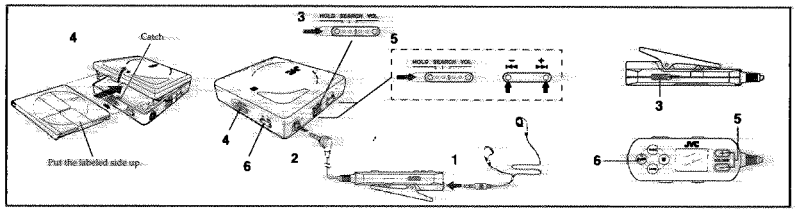

Reinforcing the Bass Sound (A.C.BASS)

Press the A.C.BASS button to activate the active clear bass function.

The "BASS" indicator appears on the remote control display. The bass level is now automatically controlled in conjunction with the sound volume.

Each time you press the A.C.BASS button the playmode changes as follows:

A.C.BASS → TRAIN" → OFF

* TRAIN mode reduces the amount of sound leaking from the headphone.

A.C. BASS button

Note:

- When the A.C.BASS button is pressed together with the P.MODE button or SEARCH button, the set mode will change. When this happens, set the A.C.BASS mode again.

Resume Play

This function allows you to listen from the beginning of the track on which play was stopped when the minidisc player was set to Stop mode.

Press the ►/II button.

Showing the Disc Information

Each time you press the DISPLAY button while in Stop mode or during playback, the MD's information is displayed as follows.

In Stop mode:

Disc title* → Total number of tracks and total playback time of the MD → Track title* → Play-back time → (back to the beginning)

During Playback:

Playing time → Track title* → (back to the beginning)

* The disc title or track title will scroll if it consists of 7 characters or more. If no title is given, "–" appears on the display. (Up to 80 characters can be displayed.)

Operation	Button	Display/Reference
To pause play	[Unit] ■ ►/II; or [Remote control] ►/II; Press during play.	0:05 Blinks. Press again to restart play. If paused for 2 minutes, the power will automatically shut off.
To stop play (Stop mode)	[Unit] ■ ►/II; or [Remote control] ■	5:40 Stops. Press the ►/II button again to restart play (Resume Play). The current track will be played from the beginning (see "Resume Play"). If stopped for 45 seconds, the power will automatically shut off. When all the music is played, the MD player automatically stops.
To turn off the unit (Off mode)	[Unit] ■ ►/II; or [Remote control] ■; In play mode, press for 1 second or more.	BYE (Blank). The power is shut off after "BYE" appears on the display. To turn on the unit, press the ►/II button.

Operation	Button	Display/Reference
Fast forward/ Reverse	**Skip function** Press during play back or while in Stop mode. **Search function** Keep depressed during play. [Unit] HOLD SEARCH VOL; [Remote control] ⏮ ⏭	• During Random Play, the skip buttons cannot be used to skip back to tracks that were played previously in the random sequence.

Repeat Play and Random Play

You can select either Repeat Play or Random Play. In Repeat Play, you can repeat all the tracks, or an individual track, as many times as you like. In Random Play, you can play all the tracks in random order.

Selecting Repeat Play and Random Play in Stop mode

In Stop mode, press the P.MODE button. Each time you press the button, the play mode changes as follows:

⊂1 → ⊂ → RND → ⊂1 RND → ⊂ RND → Original display → (back to the beginning)

⊂1 : Repeats 1 track.

⊂ : Repeats all the tracks.

RND : Random play.

⊂1 RND : Repeats one track randomly selected.

⊂ RND : Repeats all the tracks in random order.

After selecting one of the above modes, press the ►/II button.

To exit Repeat Play or Random Play, stop the MD and then press the P.MODE button until the display returns to its original setting.

Repeat Play during Playback

During Normal Play:

Each time you press the P.MODE button, the play mode changes as follows:

⊂1 → ⊂ → Original display → (back to the beginning)

Select "⊂1" to repeatedly play the current track. Select "⊂" to repeat all the tracks.

During Random Play:

Each time you press the P.MODE button, the play mode changes as follows:

⊂1 RND → ⊂ RND → Original display → (back to the beginning)

Select "⊂1 RND" to repeatedly play a randomly selected track. Select "⊂ RND" to repeat all the tracks in random order.

To exit Repeat Play or Random Play, stop the MD and then press the P.MODE button until the display returns to its original setting.

Troubleshooting Guide

Before requesting service for this minidisc player, check the chart below for a possible cause of the problem you are experiencing. Some simple checks, or a minor adjustment on your part, may eliminate the problem and restore proper operation.

If you are in doubt about some of the check points, or if the remedies indicated in the chart do not solve the problem, refer to the directory of Authorized Service Centers (enclosed with this minidisc player), or consult your dealer for instructions.

Problem	Check this
Does not operate.	Is the MD loaded? If unloaded, "No Disc" will appear on the display.
Cannot play the MD.	• Is the HOLD switch released? • Is the battery low? • Is there moisture condensation on the lens? (Wait for about an hour and then try again.)
Tracks on MD do not play in order, starting with the first track.	• Is the Repeat Play or Random Play selected? • You stopped or turned off the power while playing. It changed to Resume Play.
Cannot hear music—too noisy.	• Is the headphone plug inserted all the way? • Is the plug dirty? (Wipe away dirt on the plug.) • Is music recorded on the MD? If not, "BLANK" will appear on the display.
TV picture is distorted. Radio reception is noisy.	• Is the unit too near a TV or tuner? (If the TV or tuner is connected to a simple indoor antenna, connect it to an outdoor antenna.)
Power is not turned on.	• With both HOLD switches activated, the battery was changed during playback. (Release both HOLD switches and try to operate again.)
Charging indicator does not light during charging.	• Is the charger too hot? (If so, disconnect the AC adaptor and leave the charger for a while.)

MD Messages:

Messages	Meaning	Action
DISC ERROR	There is a problem (damage) with the disc.	Replace the disc.
READ ERROR	Cannot read data.	Remove the MD and reinsert it.

Selecting the Operational Options of Remote Control

Muting the pip tone

When you press a button on the remote control except for the A.C.BASS and VOLUME (+, –) buttons, a pip tone is emitted.

To mute the pip tone, while pressing the A.C.BASS button in Stop mode or during playback, press the P.MODE button. "BEEP OFF" appears on the remote control display.

To resume the pip tone, do the same operation again. "BEEP ON" will appear on the display.

Changing the display character contrast

The character display contrast can be adjusted when the characters become less clear due to ambient temperature or during scrolling.

While pressing the A.C.BASS button in Stop mode or during playback, press the SEARCH button. Adjustment can be made between LCD00 and LCD15. While the SEARCH button is pressed, the contrast will be changed continuously. The initial setting is "LCD10."

Contrast is down Contrast is up

Note:

- Although "LIGHT OFF" or "LIGHT ON" appears by pressing A.C.BASS button and DISPLAY button at the same time, backlight does not function on the remote control.

Using the Minidisc Player with Optional Accessories

Using the minidisc player with an audio system

You can listen to MDs through your audio system.

- After turning off the amplifier, plug a stereo connection cable (not supplied) into the headphones jack as shown below.
- Adjust the volume of the minidisc player to an appropriate level.
- Adjust the volume level on the amplifier.
- Use the unit's buttons for operation. (The remote control will issue a Pip tone.)

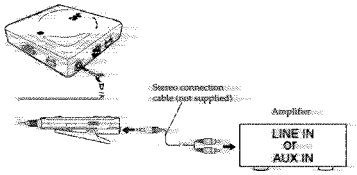

- Direct connection without passing through the remote control may generate noise.

Using the minidisc player with a car audio system

You can listen to an MD through your car audio system. The following accessories are available for your car audio system.

- Car audio cassette adaptor

CAUTION:

- Connect the car audio cassette adaptor to the remote control headphone jack. The other end connects to the cassette slot of your car.
- Adjust the volume level of the unit to an appropriate level.

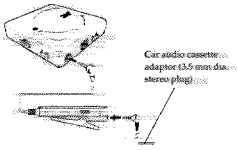

Notes:

- Since the insertion direction of the car audio cassette adaptor is limited, be sure that it can be inserted into the cassette slot of your car audio system.
- Depending on the vehicle used, noise may occur. In this case, it is recommended to connect a noise filter (available on the market) between the remote control and the car audio cassette adaptor.
- If your car audio system is equipped with a LINE IN or AUX IN jack, you can connect the output of the remote control to the jack using a stereo mini plug signal cord (not supplied). In this case, you do not need the optional car audio cassette adaptor.

Specifications

Portable MINIDISC player

Type	Minidisc digital audio system
Sampling frequency	44.1 kHz
Compression/expansion method	ATRAC method
Number of channels	2 channels (stereo)
Frequency response	20 Hz to 20,000 Hz
Wow & flutter	Unmeasurable
Output	Headphone (3.5 mm dia. stereo × 1). 5 mW/ch at 10% THD/16 ohms to 47 kohms
Duration of battery	Approx. 18 hours when using a rechargeable battery (BN-R1210) charged for 2 hours. * Above duration may differ depending on the ambient temperature and conditions.
Power requirements	DC 1.2 V (rechargeable battery)
Dimensions (L × W × H)	76 mm × 17.5 mm × 80.5 mm (Excluding buttons and controls)
Mass	Approx. 83 g (without battery)

AC adaptor (AA-R9020)

Input power source	AC 110-AC 230 V, 50 Hz/60 Hz
Output voltage	DC 9 V, 0.5 A

Charger (AC-R126)

Input power source	DC 9 V, 0.5 A

Design and specifications are subject to change without notice.

US and foreign patents licensed from Dolby Laboratories Licensing Corporation.

EN, SP, CH

1299MNMCREOZK

CAUTION

● SOUND SKIPPING

This unit has a sound skip guard memory to handle sound skipping due to single shocks or impacts. However, the sound may sometimes cut off or operation stop due to continuous impacts. This occurs because the unit pickup head cannot read the information due to continuous impacts and does not mean the unit is broken or defective.

BEFORE USING

● PROTECTIVE SPACER

This unit has a protective spacer to safeguard it from impacts during shipping. Always be sure to remove this protective spacer before use.

1. Slide OPEN ► to right.
2. Open lid while keeping finger on MD slot.
   Protective spacer pops out.

VORSICHT

● TONAUSSETZER

Dieses Gerät hat einen Speicher für Tonaussetzer, um Aussetzer bei der Wiedergabe aufgrund von einzelnen Erschütterungen oder Stößen zu vermeiden. Der Ton kann aber manchmal u.U. abgebrochen oder der Betrieb gestoppt werden, wenn das Gerät wiederholt erschüttert wird. Das liegt daran, daß der Tonaufnehmerkopf des Geräts die Toninformation bei wiederholten Erschütterungen nicht richtig ablesen kann und stellt keine Fehlfunktion am Gerät dar.

VOR DER VERWENDUNG

● SCHUTZSTÜCKE

Dieses Gerät hat ein Schutzstück, um es vor Schäden durch Erschütterungen beim Transport zu schützen. Immer sicherstellen, daß dieses Schutzstück vor der Verwendung entfernt wird.

1. Den Schalter OPEN ► nach rechts schieben.
2. Den Deckel öffnen, während der Finger auf dem MD-Schacht gehalten wird. Das Schutzstück springt heraus.

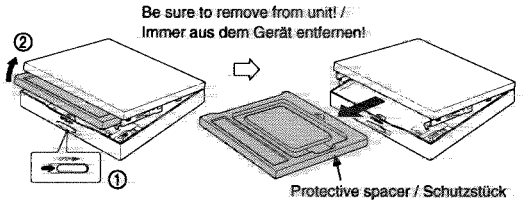

ATTENTION

● SAUT DU SON

Cet appareil est équipé d'une mémoire antichoc contre les sauts du son résultant d'un choc ou d'une secousse. Néanmoins, le son peut parfois être coupé ou l'appareil s'arrêter de fonctionner en cas de secousses répétées. Ce phénomène se produit parce que le capteur optique de l'appareil ne peut pas lire les informations en raison de ces secousses répétées et non pas parce que l'appareil est cassé ou défectueux.

AVANT L'UTILISATION

● PIÈCE D'ESPACEMENT PROTECTRICE

Cet appareil est équipé d'une pièce d'espacement protectrice pour le protéger contre les chocs au cours de la livraison. N'oubliez pas d'enlever cette pièce d'espacement protectrice avant l'utilisation.

1. Faites glisser OPEN ► vers la droite.
2. Ouvrez le couvercle tout en gardant un doigt sur la fente d'introduction de MD.
   La pièce d'espacement protectrice est éjectée.

LET OP

● OVERSLAAN VAN GELUID

Dit apparaat is voorzien van een buffergeheugen om overslaan van geluid als gevolg van schokken, stoten e.d. te voorkomen. Wanneer de schokken echter langere tijd achter elkaar aanhouden, is het mogelijk dat het geluid toch wegvalt. Dit komt omdat het pickupelement de informatie niet kan aflezen door de serie opeenvolgende schokken en wijst niet op een defect van het apparaat.

ALVORENS HET APPARAAT IN GEBRUIK TE NEMEN

● TRANSPORTVULSTUK

Dit apparaat is voorzien van een vulstuk om beschadigingen als gevolg van schokken tijdens het transport te voorkomen. Verwijder dit vulstuk voordat u het apparaat in gebruik neemt.

1. Schuif OPEN ► naar rechts.
2. Maak het deksel open terwijl u een vinger op de MD-gleuf houdt.
   Het vulstuk komt naar buiten.

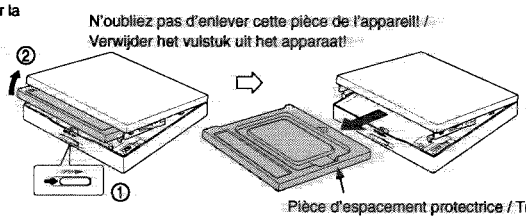

PRECAUCIÓN

● SALTO DE SONIDO

Esta unidad posee una memoria de protección contra el salto del sonido para maniobrar los saltos del sonido debido a golpes simples o impactos. Sin embargo, es posible que a veces el sonido se corte o la operación se detenga debido a impactos continuos. Esto sucede porque la cabeza lectora no puede leer la información debido los impactos continuos y no significa que la unidad se haya descompuesto o sea defectuosa.

ANTES DEL EMPLEO

● SEPARADOR DE PROTECCIÓN

Esta unidad posee un separador de protección para salvaguardarla de impactos durante el embarque. Siempre asegúrese de quitar este separador antes del empleo.

1. Deslice OPEN ► hacia la derecha.
2. Abra la tapa manteniendo el dedo sobre la ranura del minidisco.
   El separador de protección saldrá expulsado.

ATTENZIONE

● SALTI DEL SUONO

Questa unità è dotata di una memoria di riserva utile per evitare i salti di suono dovuti a sobbalzi o urti occasionali. Notare comunque che le interruzioni di suono possono essere dovute a vibrazioni continue. In questo caso le interruzioni sono inevitabili in quanto la testina di lettura non riesce a leggere le informazioni contenute sul disco, proprio perché le vibrazioni sono continue, e pertanto non bisogna pensare che l'unità è rotta o difettosa.

PRIMA DELL'USO

● DISTANZIATORE DI PROTEZIONE

Questa unità viene consegnata provvista di un distanziatore con funzione di protezione antiurti durante il trasporto. Prima di usare l'unità per la prima volta, rimuovere questo distanziatore di protezione.

1. Spostare OPEN ► verso destra.
2. Aprire il coperchio tenendo il dito sulla feritoia per il MD.
   Il distanziatore di protezione salta fuori.

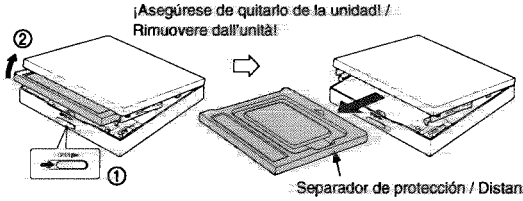

LV41751-002A

OBSERVERA

● LJUDAVBROTT

Denna apparat har ett inbyggt buffertminne för ljudavbrott som motverkar avbrott i musiken på grund av enstaka stötar och slag. Men om apparaten ständigt utsätts stötar kan ljudet ibland försvinna eller så stängs apparaten av. Detta inträffar eftersom apparatens pickuphuvud inte kan läsa information på grund av ständiga stötar. Detta betyder inte att den är trasig eller defekt.

FÖRE BRUK

● SKYDDSINLÄGG

Denna apparat levereras ett skyddinlägg för att skydda den från stötar under transport. Se alltid till att ta bort detta skyddsinlägg innanapparaten tas i bruk.

1. Skjut OPEN ► åt höger.
2. Öppna locket medan du håller fingret för MD-öppningen. Skyddsinlägget matas ut.

Skall avlägsnas från enheten! / Muista irrottaa laitteesta!

Skyddsinlägg / Suojavälilevy

HUOMAUTUS

● ÄÄNEN HYPPIMINEN

Tässä laitteessa on äänen hyppimisen suojamuisti värinän ja iskujen aiheuttaman äänen hyppimisen varalta. Ääni saattaa kuitenkin joskus jäädä pois tai laitteen toiminta pysähtyä, jos värinä on jatkuvaa. Tämä johtuu siitä, että laitteen lukupää ei voi lukea tietoja jatkuvan värinän vuoksi eikä se tarkoita, että tässä laitteessa on vika.

ENNEN KÄYTTÖÄ

● SUOJAVÄLILEVY

Tässä laitteessa on suojavälilevy, joka suojaa laitetta kuljetuksen aikana syntyvältä värinältä. Tämä välilevy on irrotettava ennen käyttöä.

1. Siirrä kohtaa OPEN ► oikealle.
2. Avaa kansi pitämällä samalla sormesi MD-aukolla. Suojavälilevy työntyy pois.

FORSIGTIG

● LYDUDFALD

Dette apparat er udstyret med en hukommelse til forebyggelse af lydudfald, således at lydudfald forårsaget af enkelte stød eller rystelser kan forhindres. Dog kan der af og til være tilfælde af lydudfald eller operationen kan standse på grund af vedvarende rystelser. Dette sker, fordi apparatets pickup-hovede ikke kan læse informationen på grund af vedvarende rystelser, og betyder ikke, at apparatet er gået i stykker eller er defekt.

INDEN BRUGEN

● BESKYTTELSESSKIVE

Dette apparat er udstyret med en beskyttelsesskive, som tjener til at beskytte apparatet mod rystelser under forsendelsen. Husk altid at fjerne denne beskyttelsesskive, inden apparatet tages i brug.

1. Skyd OPEN ► mod højre.
2. Åbn låget, mens De holder en finger på MD-åbningn. Beskyttelsesskiven springer ud.

Sørg for at tage beskyttelsesskiven ud af apparatet! / 必须从本机中取出

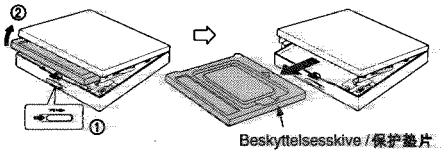

Beskyttelsesskive / 保护垫片

注意事项

• 声音略过

本机备有防止声音略过存储器，可处理由于受到震动或撞击所产生的声音略过。不过，声音可能由于受到连续撞击而引致中断或停止操作。出现这种现象是因为由于发生连续撞击，使本机的拾音头无法读到讯息。此并不代表本机已经损坏或有瑕疵。

在使用之前

• 保护垫片

本机附有保护垫片，可避免本机在搬运时受到撞击。在使用之前，必须将其取出。

1. 将 OPEN ► 滑向右边。
2. 打开盖时请将手指放在音碟插槽上。保护垫片弹出。

ВНИМАНИЕ

● ПРОПУСК ЗВУКА

Это устройство имеет память защиты пропусков звука для предотвращения пропусков звука по причине однократных ударных воздействий. Однако, звук иногда может прерываться или работа устройства может быть остановлена по причине продолжительных ударных возде йствий. Это происходит потому, что головка звукоснимателя устройства не может считывать информацию по причине продолжительных ударных воздействий, но это не означает, что устройство сломано или дефектное.

ПЕРЕД ИСПОЛЬЗОВАНИЕМ

● ЗАЩИТНАЯ ПРОКЛАДКА

Это устройство имеет защитную прокладку для защиты устройства от ударных воздействий во время транспортировки. Обязательно снимите эту защитную прокладку перед использованием.

1. Переместите кнопку OPEN ► вправо.
2. Откройте крышку, держа палец на щели для MD. Защитная прокладка выскакивает.

Обязательно выньте из устройства! / Ujistěte se, že je mimo jednotku!

Защитная прокладка / Ochranná výplň

UPOZORNĚNÍ

● PŘESKAKOVÁNÍ ZVUKU

Tato jednotka má ochrannou paměť zamezující přeskakování zvuku vinou jednotlivých poruch či vlivů. Nicméně může občas dojít k přerušení zvuku či k zástavě operace v důsledku souvislého působení. Dochází k tomu proto, že hlava jednotky nemůže vlivem souvislého působení načítat informace, neznamená to však, že by jednotka byla vadná či porouchaná.

PŘED POUŽITÍM

● OCHRANNÁ VÝPLŇ

Tato jednotka obsahuje ochrannou výplň, jež ji chrání v průběhu přepravy. Před použitím se vždy ujistěte, že ochranná výplň byla odstraněna.

1. Nastavte OPEN ► doprava.
2. Zatímco prst bude na vstupu pro MD, otevřete kryt. Ochranná výplň vypadne ven.

UWAGA

● PRZESKAKIWANIE DŹWIĘKU

Niniejsze urządzenie posiada pamięć ochrony przed przeskakiwaniem dźwięku, która chroni przed przeskakiwaniem dźwięku spowodowanym pojedyńczymi uderzeniami lub wstrząsami. Pod wpływem nieustannych wstrząsów może jednak dojść do odcięcia dźwięku lub zatrzymania urządzenia. Przyczyną będzie w takim wypadku niezdolność głowicy zbierającej do odczytania informacji, spowodowana nieustannymi wstrząsami, co nie jest oznaką uszkodzenia ani fabrycznej usterki sprzętu.

PRZED UŻYCIEM

● PRZEKŁADKA OCHRONNA

Niniejsze urządzenie wyposażone jest w przekładkę ochronną, zabezpieczającą je przed wstrząsami podczas transportu. Należy pamiętać o usunięciu tej przekładki przed rozpoczęciem używania sprzętu.

1. Przesuń OPEN ► na prawo.
2. Otwórz pokrywę, wkładając palec w otwór MD. Przekładka ochronna wysunie się.

Pamiętaj o wyjęciu z urządzenia! / Bizonyosodjon meg róla, hogy levette - e az egységről!

Przekładka ochronna / Védő spacer

FIGYELMEZTETÉS

● HANG VIBRÁLÁSA

Ez a darab rendelkezik egy hangmegszakadás-gátló memóriával, az egyes ütődések és külső hatások esetére. Azonban előfordulhat, hogy a hang megszakad vagy a működés leáll a folyamatos ütődések miatt. Ez azért van, mert a felvevőfej nem tudja leolvasni az információt a folyamatos ütődések miatt, de nem jelenti azt, hogy a darab eltörött vagy hibás.

HASZNÁLAT ELŐTT

● VEDŐ SPACER

Ez a darab rendelkezik egy védő spacer-rel, ami megvédi az ütődésektől a szállítás alatt.
Mindig bizonyosodjon meg róla, hogy eltávolította-e a védő spacert használat előtt.

1. OPEN ► csúsztatva jobbra.
2. Ujját az MD nyílához tartva nyissa ki a fedelet. A védő spacer kiugrik.

Disassembly method

■Removing the MD door ass'y (See Fig.1 and 2)

1. Open the door by moving the eject knob.

2. Remove the four screws A attaching the MD door ass'y. Detach the MD door ass'y from the main body.

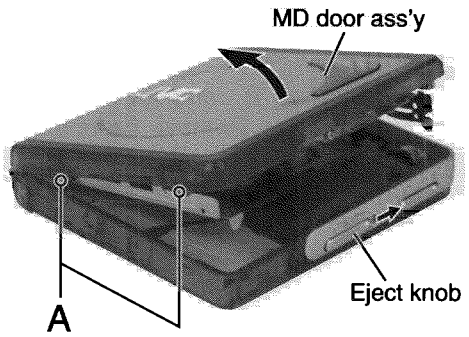

Fig.1

■Removing the holder ass'y (See Fig.3 and 4)

1. Turn the holder ass'y as shown in Fig.3.

2. Pull the side arm (L) marked a outward, then remove. Open the holder ass'y as shown in Fig.4.

3. Move the U-shaped notch marked b in the direction of the arrow and release it from the shaft.

4. Move the part c inward and pull out the holder ass'y from the shaft.

ATTENTION: When reassembling, first reattach the part c to the shaft of the chassis ass'y. And next, fit the U-shapednotch to the shaft.

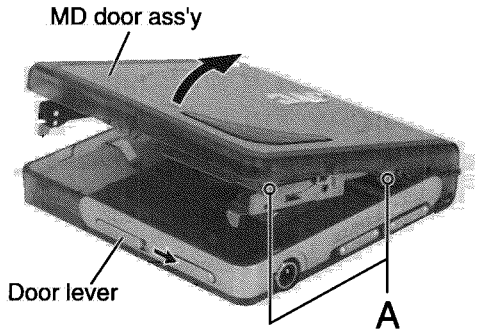

Fig.2

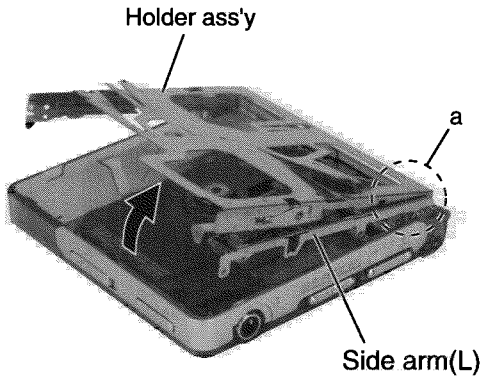

Fig.3

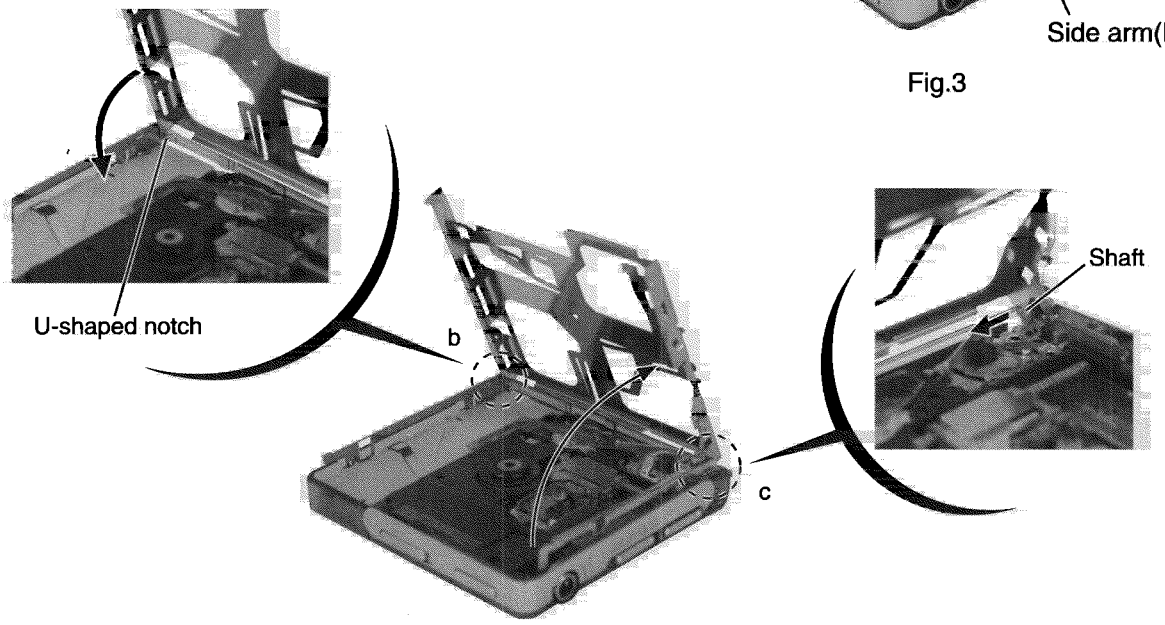

Fig.4

■Removing the chassis ass'y (See Fig.5 and 6)

1. Remove the two screws B and the one screw C attaching the chassis assy. Remove the one screw D attaching the jack cover.

2. Open the battery lid and release the tab d from the chassis. Pull out the battery lid.

3. Remove the one screw E attaching the arm (L).

4. Remove the chassis ass'y and the arm (L) while releasing them from the headphone jack on the bottom case.

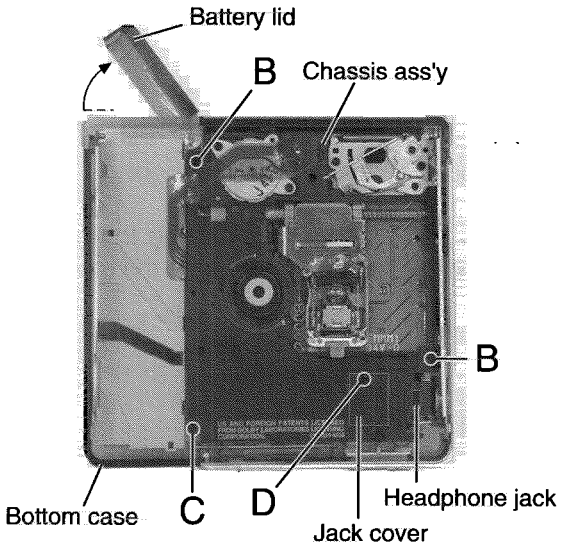

Fig.5

■Removing the main P.W. board and the battery holder(See Fig.7 and 8)

1. Use a soldering bit provided with ground to solder or unsolder the short round.

2. Ground the set and the P.W.board. The voltage level of the ground should be equal to that of the soldering bit.

3. Prevent static electricity using an earth band, etc.

4. Solder the short round of the pickup flexible wire for short circuit.

5. Disconnect the flexible wires from the connector CN301 and CN401 on the main P.W.Board.

6. Remove the one screw F attaching the main P.W.board. Remove the main P.W.board and the battery holder, then reverse them.

7. Disconnect the flexible wire from connector CN601 on the main P.W.board.

8. Unsolder the soldered joint of the main P.W.board and the battery holder P.W.board.

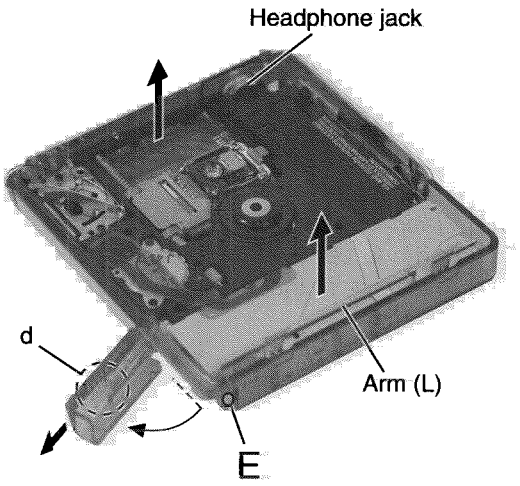

Fig.6

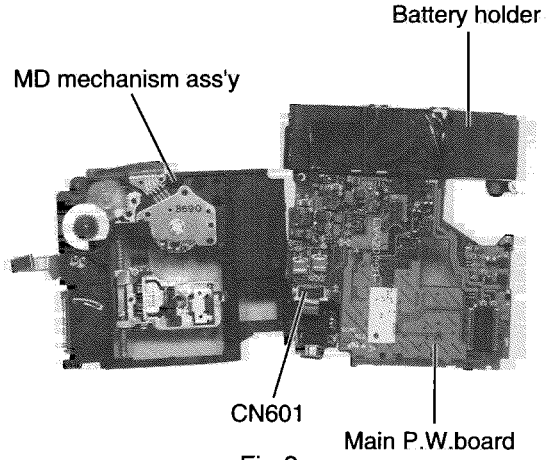

Fig.8

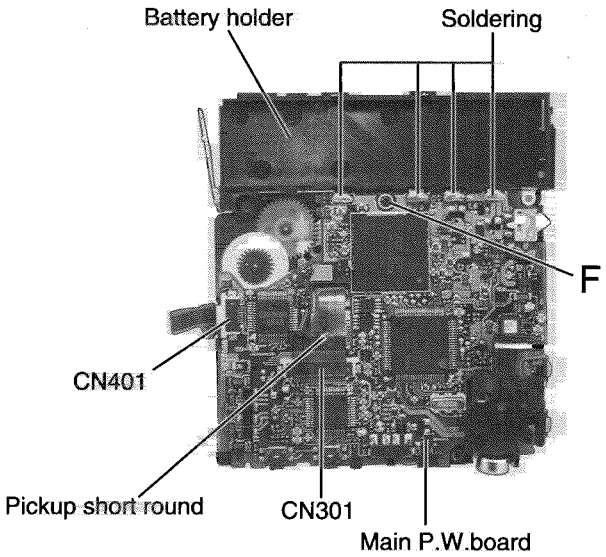

Fig.7

<Removal of the MD mechanism>

■ Removing the spindle motor(See Fig.9)

1. Unsolder the part e of the flexible wire extending from the underside of the chassis ass'y to the spindle motor. At this time, do not spill flux on the gear and others.

2. Remove the three screws H attaching the spindle motor and detach it from the chassis ass'y.

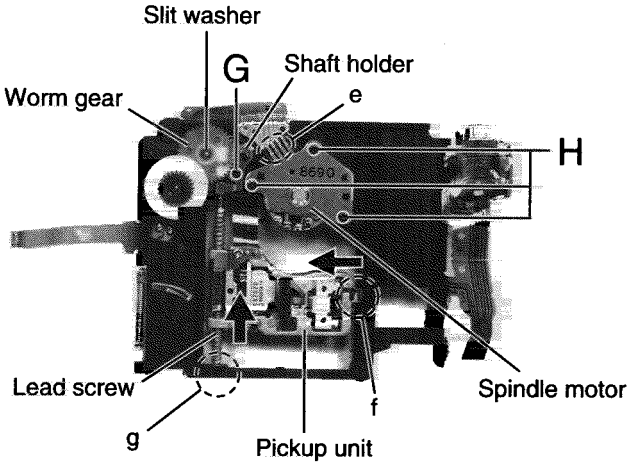

Fig.9

■ Removing the pickup unit(See Fig.9)

1. Remove the slit washer and the worm gear from the underside of the chassis ass'y.
2. Remove the screw G attaching the shaft holder, then detach the shaft.

3. Pull out the part f and g in the directions of the arrows to remove the pickup unit and the lead screw.

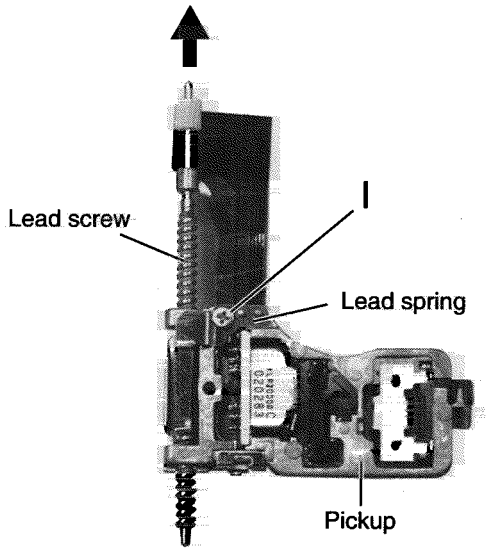

Fig.10

■ Removing the pickup(See Fig.10 and 11)

1. Remove the screw I attaching the lead spring, then detach the lead spring.

2. Pull out the lead screw from the pickup.

ATTENTION: When handling the pickup unit, touch the parts marked in Fig.11 only.

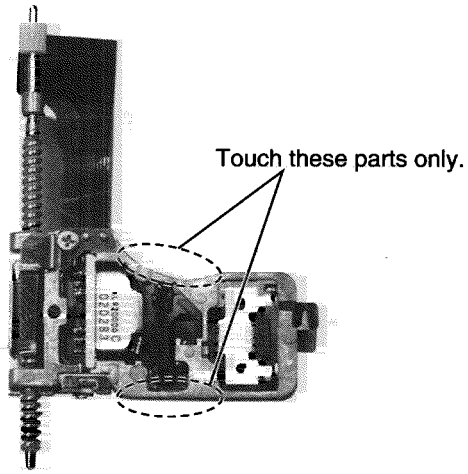

Fig.11

■Removing the feed motor (See Fig.12)

1. Peel off the part h of the flexible wire on the underside of the feed motor.

2. Unsolder the solder joint j connecting the flexible wire to the feed motor.

3. Peel off the part i of the flexible wire.

4. Remove the two screws J attaching the feed motor on the upper side of the chassis ass'y.

ATTENTION: When reassembling, reattach the flexible wire with an adhesive tape and solder the appropriate part.

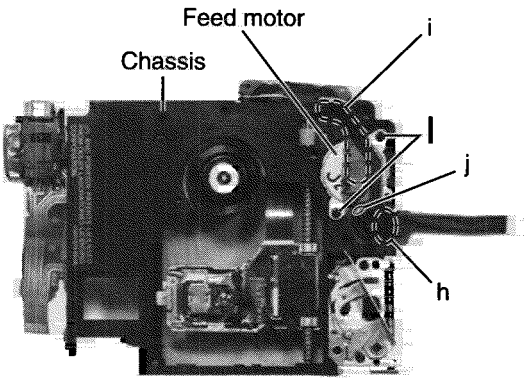

Fig.12

■Removing the SW P.W.B ass'y (See Fig.12)

1. Remove the SW P.W.B ass'y attached to the side of the chassis ass'y with the double-sided tape.

2. When reassembling, reattach the SW P.W.B ass'y with an adhesive tape as before.

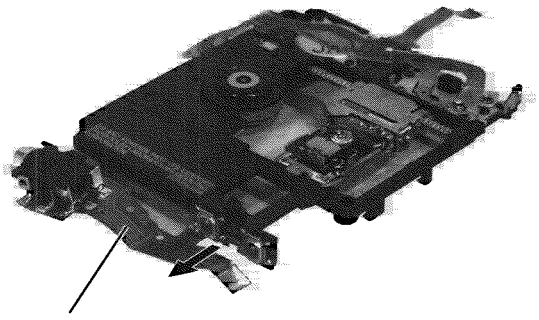

Fig.13

Adjustment method

This adjustment is use remote controller.

Test mode setting method

Press < PLAY MODE + DISPLAY + BASS > and < PLAY >key together more than 3sec. at power off condition.
< VOL− > → next item .< VOL+ >before item.

LCD indication

0. TMD-V2 → Test mode setting OK. Indicate at 2sec.
- When LCD indicate [NG] at another item, Return back this item by press (STOP) key

1. レジューム → Resume initialize
- LCD Indication change :[OK→ショリチュウ→レジューム]
  - * ショリチュウ→Initializing
  - * レジューム → Resume

2. サーボ → Servo initialize
- LCD Indication change : [OK→ショリチュウ→ サーボ]
  - * ショリチュウ→Initializing
  - * サーボ →Servo

3. Pレーザ → PLAY LASER
- Executes by < BASS > LCD Indication change :[XX:YY]
- Up by < VOL+> .Down by <VOL−> LCD Indication change :[VW.YY]
- Setting by <STOP> LCD Indication change :[OK→ Pレーザ]
  - *Pレーザ→PLAY LASER

Adjust power-supply voltage 1.5v ± 20mv before the laser power is adjusted and stops.

4. フィード → FEED
- Executes by < BASS > LCD Indication change :[FwdBwd]
- <VOL+> :Pickup is go to outside < VOL-> :Pickup is go to inside
- Press < STOP > LCD Indication change :[OK→ フィード]
  - * フィード→FEED

5. MoTG → MO TG
- Executes by < BASS >
  LCD Indication change : [OK→ショリチュウ→ MoTG]
  - * ショリチュウ→ Adjusting

6. Mチョウセイ → MO DISC ADJUST
- Executes by < BASS >
  LCD Indication change : [ショリチュウ→OK →XXYYZZ]
  - * ショリチュウ→ Adjusting
- Press < STOP >
  LCD Indication change : [OK→Mチョウセイ]
  - * Mチョウセイ→ MO DISC ADJUST

7. Pr.TG → Pre TG
- Executes by < BASS >
  LCD Indication change : [ショリチュウ →OK→PreTG]
  - * ショリチュウ→ Adjusting

8. Pチョウセイ → Pre DISC ADJUST
- Executes by < BASS >
  LCD Indication change : [ショリチュウ →OK→XXYYZZ]
- Press < STOP >
  - * ショリチュウ→ Adjusting

9. リセット → RESET
- Executes by < BASS >
  LCD Indication : Left out the test mode ,power off ,and END.

Maintenance of MD pickup

1. Cleaning of pickup lens

(1) Prior to changing the pickup, clean the pickup lens.

(2) For cleaning the lens, use the following cotton swab after mearsing it in alcohol.

Product No. JCB-B4; Manufacturer;Nippon Cotton Swab

2. Confirmation of the service life of laser diode when the service life of the laser diode has been exhausted, the following symptoms will appear.

(1) The RF output (EFM output and eye pattern amplitude) will become lower.

(2) The drive current required for light emitting of laser diode will be increased.

Confirm the service life according to the following flow chart:

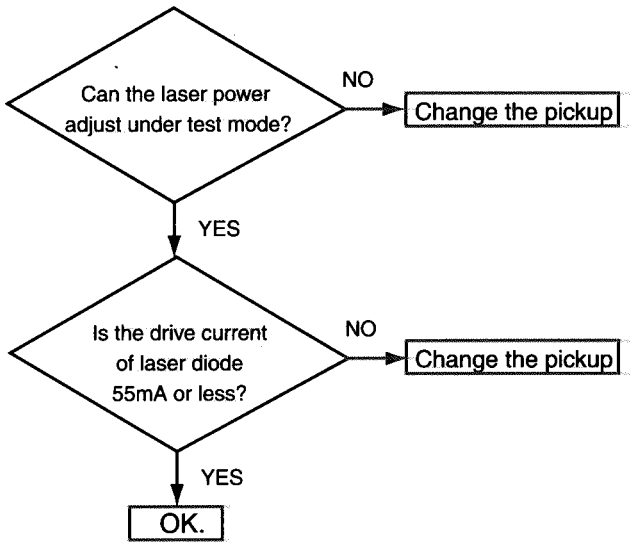

3. Method of measuring the drive current of laser diode

When the voltage measured at the both side of carbon resistor R301 on the MD servo P.C. board (LVB20008) have become 12.1mV or over, the service life of the laser diode is judged to have been exhausted.

Procedures of changing the MD pickup

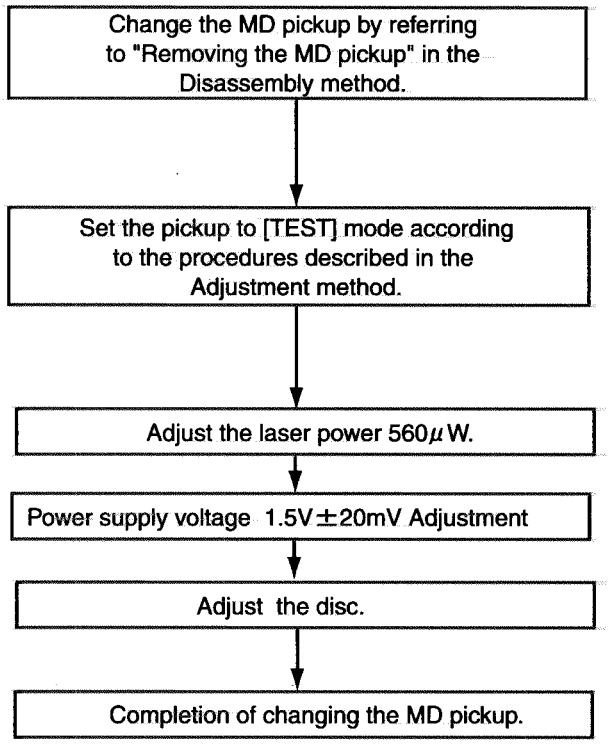

Be sure to perform not only adjustment and operation of this system so carefully as not to directly look at the laser beam or touch on the body.

4. About Semi-solid state resistor of pick up

This is adjusted in the maker of pick up .
Be careful please not to touch pick up .

Description of major ICs

■ AK93C45BH-W (IC502,IC503) : EEPROM

1.Pin layout

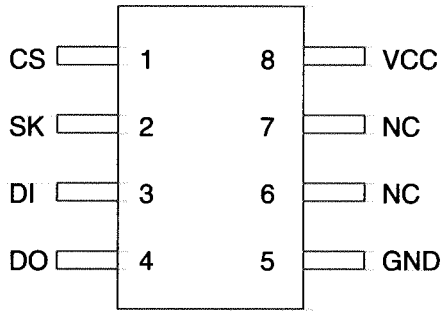

2.Pin function

Symbol	Function
CS	Chip select
SK	Clock input
DI	Data input
DO	Data output
Vcc	Poser supply
GND	Ground
NC	Non connect

3.Block diagram

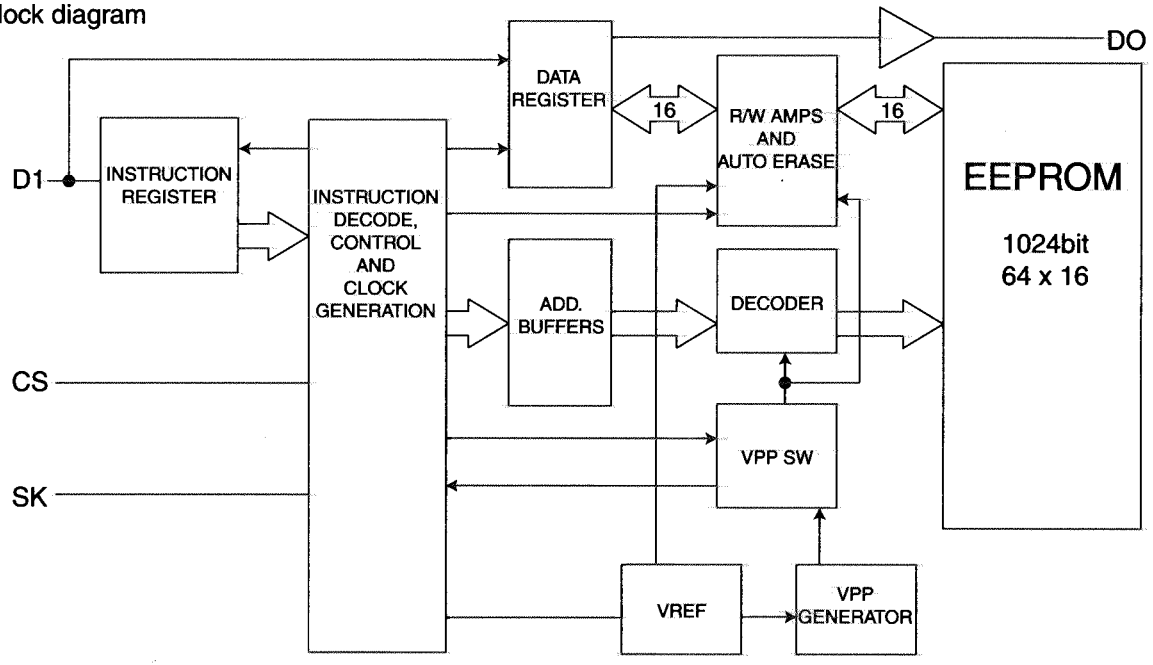

■CXA2588R (IC300) : RF amp.

1. Pin layout & Block diagram

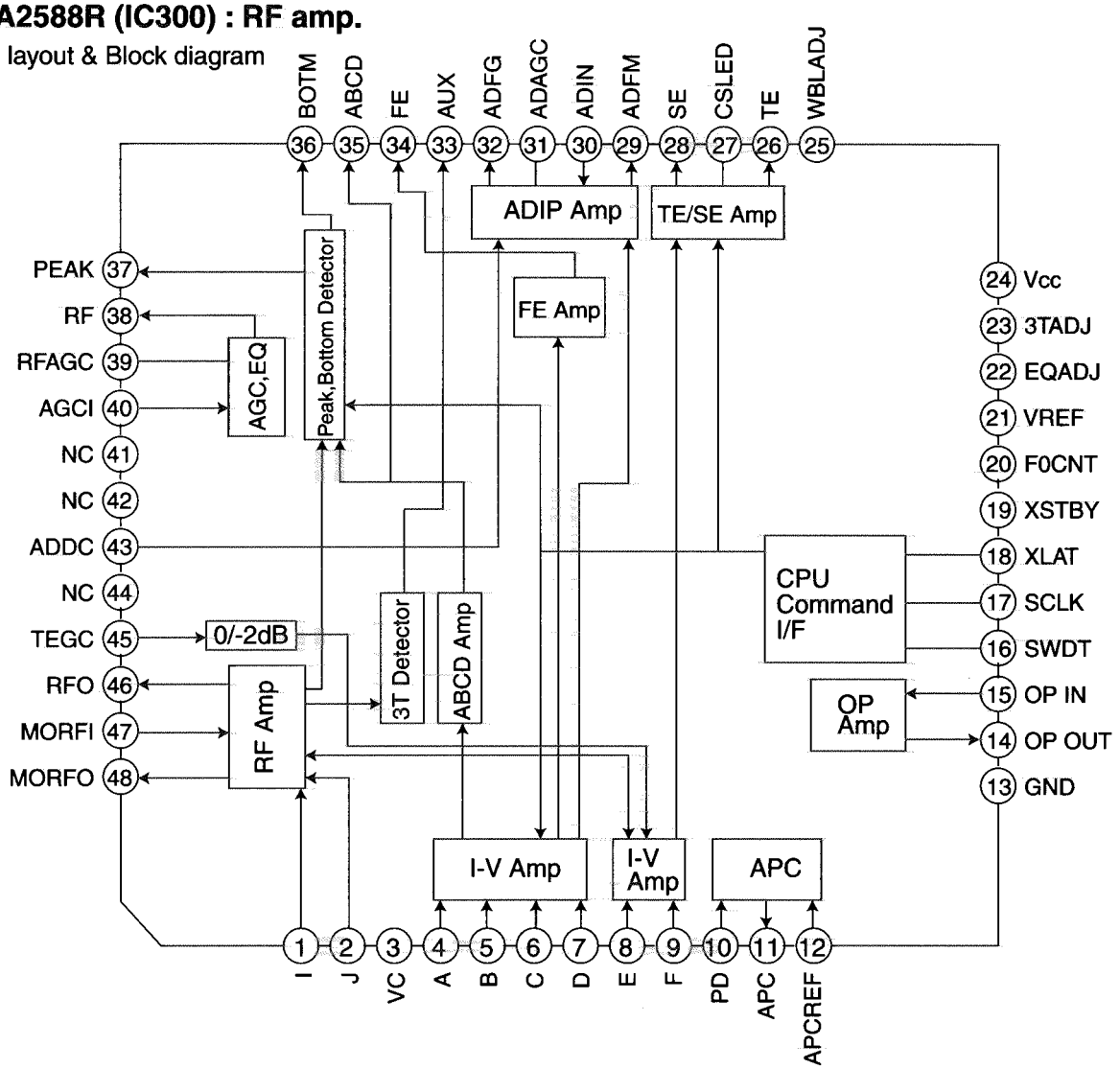

2.Pin function

Pin No.	Symbol	I/O	Function	Pin No.	Symbol	I/O	Function
1	I	I	I-V converted RF signal I input	25	WBLADJ	I/O	BPF3T IF setting terminal
2	J	I	I-V converted RF signal J input	26	TE	O	Tracking error signal output terminal
3	VC	O	Vcc/2 voltage output	27	CSLED	-	Sled error signal LPF capacitor connect terminal
4	A	I	A current input for main beam servo signal	28	SE	O	Sled error signal output terminal
5	B	I	B current input for main beam servo signal	29	ADFM	O	ADIP FM signal output terminal
6	C	I	C current input for main beam servo signal	30	ADIN	I	ADIP signal completer input terminal
7	D	I	D current input for main beam servo signal	31	ADAGC	-	ADIP AGC capacitor connect terminal
8	E	I	E current input for side beam servo signal	32	ADFG	O	ADIP binary signal output
9	F	I	F current input for side beam servo signal	33	AUX	O	I3 output/temp.signal output
10	PD	I	Reflection light q'ty monitor signal input	34	FE	O	Focus error signal output
11	APC	O	Laser APC output	35	ABCD	O	Reflection light q'ty signal output for main beam servo detector
12	APCREF	I	Ref. voltage input for laser power intensity setting	36	BOTM	O	RF/ABCD bottom-hold signal output
13	GND	-	Ground	37	PEAK	O	RF/ABCD peak-hold signal output
14	OPOUT	O	Ope. amp output terminal	38	RF	O	RF equalizer output
15	OPIN	I	21dB ope. amp input terminal	39	RFAGC	-	RFAGC capacitor connection
16	SWDT	I	Serial data input terminal	40	AGCI	I	RFAGC input
17	SCLK	I	Shift clock input terminal	41	NC	-	Non connect
18	XLAT	I	Latch input terminal	42	NC	-	Non connect
19	XSTBY	I	Stand by setting terminal	43	ADDC	I/O	ADIP amp. feedback circuit capacitor connection
20	F0CNT	I	F0 count setting terminal	44	NC	-	Non connection
21	VREF	O	Reference voltage output terminal	45	TEGC	I	TE amp. gain switching
22	EQADJ	I/O	EQ IF setting terminal	46	RFO	O	RF amp. output
23	3TADJ	I/O	BPF3T IF setting terminal	47	MORFI	I	Groove RF signal AC-coupled input
24	Vcc	-	Power supply	48	MORFO	O	Groove RF signal output

■CXA8069M (IC450) : Sensoorless moter driver

1. Pin layout

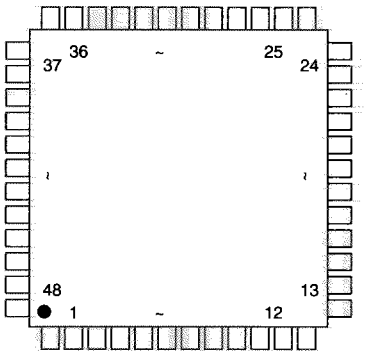

2. Block diagram

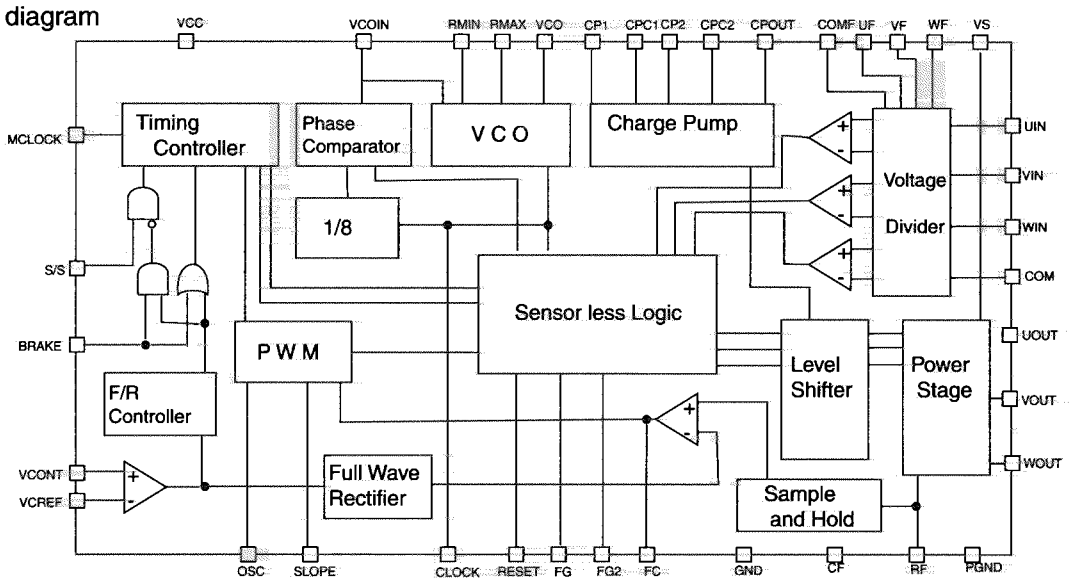

3. Pin function

Pin no.	Symbol	Function	Pin no.	Symbol	Function
1	NC		25	VCOIN	For controlling frequency of VCO
2	RF	For monitoring motor current	26	CLOCK	For CLOCK signal monitor
3	VS	For supplying the voltage to the power stage	27	GND	
4	NC		28	CF	For sample and hold circuit to mesasure motor current
5	CPC1	For connecting to the first charge pump capacitor	29	OSC	For oscillating sawtooth PWM
6	CP1	For connecting to the first charge pump capacitor	30	SLOPE	For oscillating sawtooth for soft-switching
7	CPC2	For connecting to the second charge pump capacitor	31	MCLOCK	For input of clock
8	CP2	For connecting to the second charge pump capacitor	32	VCC	For supplying the voltage except the power section
9	CPOUT	For connecting to the third charge pump capacitor	33	NC	
10	GND	For GND except the power section	34	VS	For supplying the voltage to the power stage
11	S/S	For start and stop	35	RF	For monitoring motor current
12	BRAKE	For brake	36	NC	
13	VCONT	For controlling velocity	37	RESET	For resetting register
14	VCREF	For reference to control velocity	38	WIN	For sensing back electro magnetic force of coils
15	FG	For FG output	39	WOUT	For output
16	FG2	For FG output of dividing Pin15 signal by 2	40	NC	
17	FC	For control amp phase compensation	41	VIN	For sensing back electro magnetic force of coils
18	VCO	For setting oscilation frequency of VCO	42	VOUT	For output
19	RMAX	For setting max.frequency of VCO	43	NC	
20	RMIN	For setting min.frequency of VCO	44	NC	
21	COMF	For shaping waveform of motor voltage	45	UIN	For sensing back electro magnetic force of coils
22	WF	For shaping waveform of motor voltage	46	UOUT	For output
23	VF	For shaping waveform of motor voltage	47	COM	For the common voltage sensing
24	UF	For shaping waveform of motor voltage	48	PGND	For the GND for power stage guarding

■ CXD2661GA-1 (IC351) : DSP

1. Pin layout

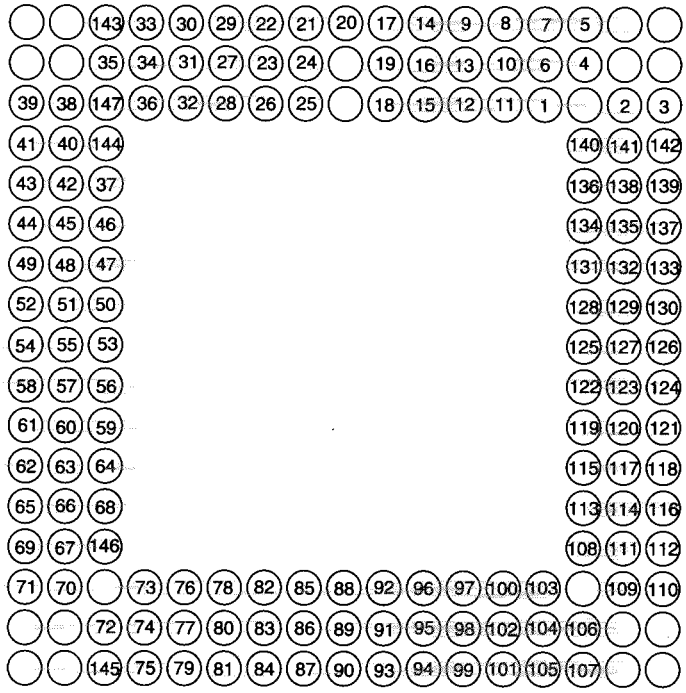

2. Block diagram

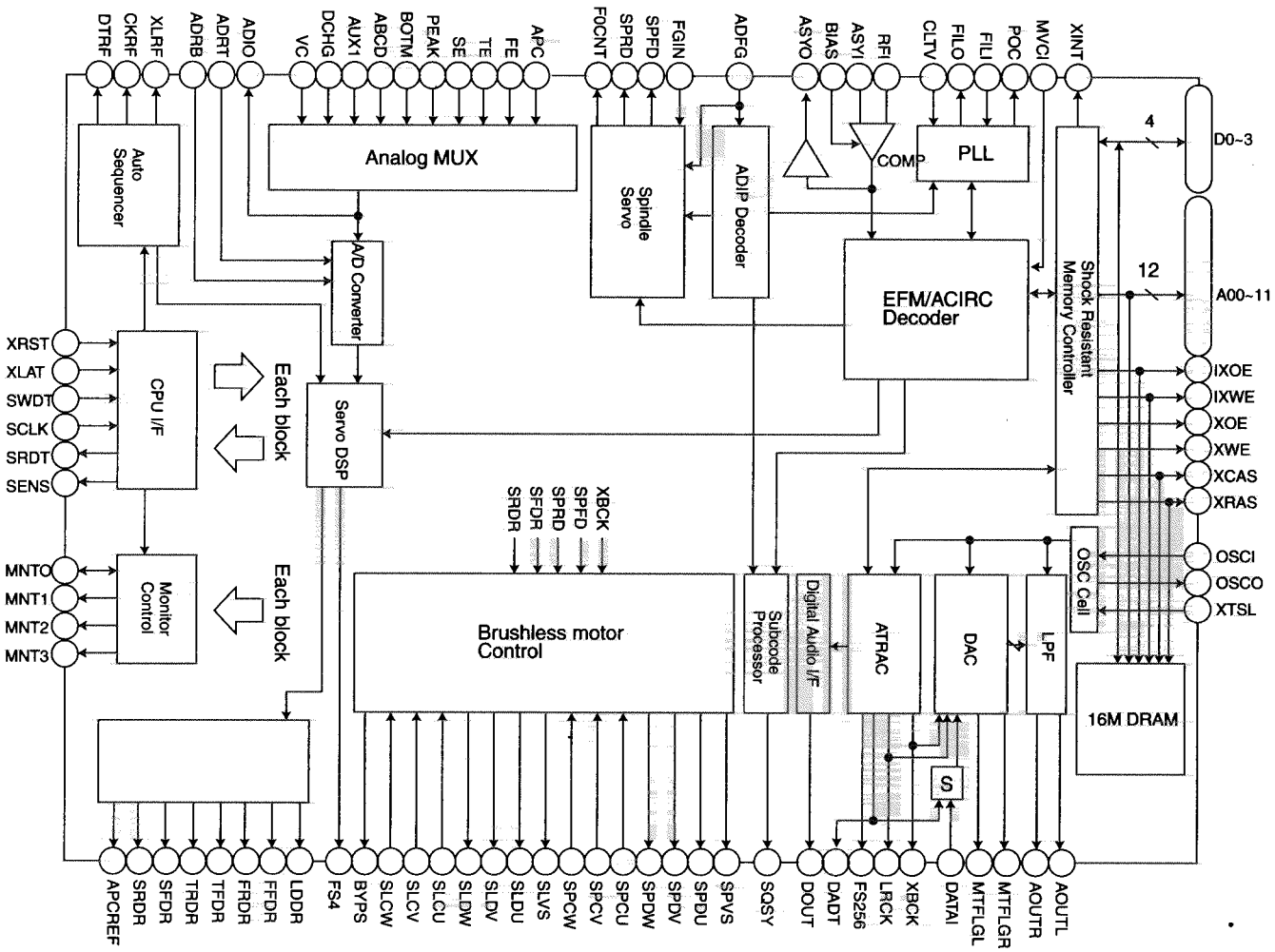

2. Pin function (1/3)

Pin no.	Symbol	I/O	Function
1	VDCO	-	VDD for internal logic (1.8V)
2	MNT0	I/O	Monitor input/output
3	MNT1	O	Monitor output
4	MNT2	O	Monitor output
5	MNT3	O	Monitor output
6	SWDT	I	Microcomputer serial bus data writing input
7	SCLK	I	Microcomputer serial bus clock input
8	XLAT	I	Microcomputer serial bus latch input
9	VSCO	-	GND for internal logic (1.8V)
10	SRDT	O	Microcomputer serial bus data reading output
11	SENS	O	An internal state output to the address of the microcomputer seriall bus.
12	XRST	I	Resets input "L"=reset
13	SQSY	O	PTGR=0 : ADIP sync output,PTGR=1 : DISC SUB-Q sync output
14	MTFLGL	O	Lch 0 data detection flag output
15	TST1	I	Test terminal "L"
16	XINT	O	Interrupt status output
17	TST2	I	Test terminal "L"
18	VDIOSC	-	Vdd for OSC cell (2.4V)
19	OSCI	I	X 'tal oscillation circuit input
20	OSCO	O	X 'tal oscillation circuit output
21	VSIOSC	-	GND for OSC cell
22	DAVSSL	-	Build in DAC GND (Lch)
23	VREFL	O	Built-in DAC VREF (Lch)
24	AOUTL	O	Built-in DAC Lch output
25	DAVDDL	-	Built-in DAC VDD (Lch 2.4V)
26	DAVDDR	-	Built-in DAC VDD (Lch 2.4V)
27	AOUTR	O	Built-in DAC Rch output
28	VREFR	O	Built-in DAC VREF (Rch)
29	DAVSSR	-	Built-inDAC GND (Rch)
30	VSC1	-	GND for internal logic
31	TST9	I	Test terminal "H"
32	TST3	I	Test terminal "L"
33	TST4	I	Test terminal "L"
34	DOUT	O	Digital audio output
35	NC	-	OPEN
36	VDC1	-	VDD for internal logic. (1.8V)
37	VDC2	-	VDD for internal logic. (1.8V)
38	DATA1	I	External audio data input terminal to internal DAC
39	TST5	I	Test terminal "L"
40	TST6	I	Test terminal "L"
41	TST7	I	Test terminal "L"
42	DADT	O	Data output to external D/A converter
43	LRCK	O	LR clock for external D/A converter (44.1kHz)
44	VSC2	-	GND for internal logic. (1.8V)
45	XBCK	O	Bit clock for external D/A converter (2.8224MHz)
46	F256	O	11.2896MHz clock output (X'tal)
47	A03	O	Address output for external DRAM When external DRAM is not used, OPEN.
48	A04	O	Address output for external DRAM When external DRAM is not used, OPEN.
49	A02	O	Address output for external DRAM When external DRAM is not used, OPEN.
50	A05	O	Address output for external DRAM When external DRAM is not used, OPEN.

2. Pin function (2/3)

Pin no.	Symbol	I/O	Function
51	A01	O	Address output for external DRAM When external DRAM is not used, OPEN.
52	A06	O	Address output for external DRAM When external DRAM is not used, OPEN.
53	VDIO1	-	VDD for I/O cell (2.4V)
54	VSIO1	-	GND for I/O cell
55	A00	O	Address output for external DRAM When external DRAM is not used, OPEN.
56	A07	O	Address output for external DRAM When external DRAM is not used, OPEN.
57	A10	O	Address output for external DRAM When external DRAM is not used, OPEN.
58	A08	O	Address output for external DRAM When external DRAM is not used, OPEN.
59	A09	O	Address output for external DRAM When external DRAM is not used, OPEN.
60	XRAS	O	RAS output for external DRAM When external DRAM is not used, OPEN.
61	IXOE	O	Open
62	IXWE	O	Open
63	XCAS	O	CAS output for external DRAM When external DRAM is not used, OPEN.
64	D1	I/O	Data I/O for external DRAM When external DRAM is not used, OPEN.
65	D2	I/O	Data I/O for external DRAM When external DRAM is not used, OPEN.
66	D0	I/O	Data I/O for external DRAM When external DRAM is not used, OPEN.
67	D3	I/O	Data I/O for external DRAM When external DRAM is not used, OPEN.
68	VDC3	-	VDD for 1.8V internal logic
69	VSC3	-	VSS for 1.8V internal logic
70	A11	O	Open
71	XOE	O	Output enable output for external DRAM When external DRAM is not used, OPEN.
72	XWE	O	Write enable output for external DRAM When external DRAM is not used, OPEN.
73	MVCI	I	Clock input from external VCO
74	ASYO	O	Playback EFM binarization signal output
75	ASYI	I	Playback EFM comparator slice level input
76	AVD1	I	Analog power supply (2.4V)
77	BIAS	I	Playback EFM comparator bias current input
78	RFI	I	Playback EFM RF signal input
79	AVS1	-	Analog GND
80	PCO	O	Phase comparison output for playback EFM system mastering PLL
81	FILI	I	Filter input for playback EFM system mastering PLL
82	FILO	O	Filter output for playback EFM system mastering PLL
83	CLTV	I	Internal VCO control voltage input for playback EFM system mastering PLL
84	PEAK	I	Peak holding input of optical amount signal (From CXA2523AR)
85	BOTM	I	Bottom holding input of optical amount signal
86	ABCD	I	Optical amount signal input (From CXA2523AR)
87	FE	I	Focus error signal input (From CXA2523AR)
88	AUX1	I	Assistance A/D input (when not using .connect to analog power supply)
89	VC	I	Middle point voltage input (From CXA2523AR)
90	ADIO	O	Open
91	ADRT	I	A/D converter operation range upper bound voltage input
92	AVD2	-	Analog power supply (2.4V)
93	AVS2	-	Analog GND
94	ADRB	I	A/D converter operation range lower bound voltage input
95	SE	I	SLED error input (From CXA2523AR)
96	TE	I	Tracking error input (From CXA2523AR)
97	DCHG	I	Connects with an analog power supply of low impedance
98	APC	I	Error signal input for laser digital APC (From CXA2523AR)
99	ADFG	I	ADIP binary-coded FM signal input (22.05 1kHz) (From CXA2523)
100	VDIO2	-	VDD for I/O (2.4V)

2. Pin function (3/3)

Pin no.	Symbol	I/O	Function
101	VSIO2	-	VSS for I/O (2.4V)
102	F0CONT	O	Filter cutting off control output of CXA2523
103	XLRF	O	Latch output for CXA2523 control
104	CKRF	O	Clock output for CXA2523 control
105	DTRF	O	Data output for CXA2523 control
106	APCREF	O	Reference PWM output for laser APC
107	LDDR	O	PWM output for laser digital APC
108	VDC4	-	VDD for internal logic (1.8V)
109	TRDR	O	Tracking servo drive PWM output (-)
110	TFDR	O	Tracking servo drive PWM output (+)
111	FFDR	O	Focus servo drive PWM output (+)
112	FRDR	O	Focus servo drive PWM output (-)
113	FS4	O	176.4KHZ clock output (X 'tal)
114	SRDR	O	SLED servo drive PWM output (-)
115	SFDR	O	SLED servo drive PWM output (+)
116	VSC4	-	GND for internal logic
117	SPRD	O	Spindle servo drive output (PWM - or polarity)
118	SPFD	O	Spindle servo drive output (PWM + or PWM absolute value)
119	FGIN	I	FG input for spindle CAV servo
120	TESTI	I	Test input. Connects to GND.
121	TEST2	I	Test input. Connects to GND.
122	TEST3	I	Test input. Connects to GND.
123	MTFLGR	O	Rch 0 data detection flag output
124	SPVS	O	Brush less spindle moter Absolute value PWM output
125	VDIO3	-	VDD for I/O cell (2.4V)
126	VSIO3	-	VSS for I/O cell
127	SPDU	O	Brush less spindle moter three phases drive logic output.
128	SPDV	O	Brush less spindle moter three phases drive logic output.
129	SPDW	O	Brush less spindle moter three phases drive logic output.
130	SPCU	I	Brush less spindle moter drive comparate input.
131	SPCV	I	Brush less spindle moter drive comparate input.
132	SPCW	I	Brush less spindle moter drive comparate input.
133	SLDU	O	Brush less SLED moter three phases drive logic output.
134	SLDV	O	Brush less SLED moter three phases drive logic output.
135	SLDW	O	Brush less SLED moter three phases drive logic output.
136	VDC5	-	VDD for internal logic.
137	VSC5	-	GND for internal logic.
138	SLCU	I	Brush less SLED moter three phases drive comparate input.
139	SLCV	I	Brush less SLED moter three phases drive comparate input.
140	SLCW	I/O	Brush less SLED moter three phases drive comparate input.
141	SLVS	O	Brush less SLED moter absolute value PWM output.
142	BYPS	O	Brush less SLED moter supplementary output.
143	DVSS0	-	GND for built-in 16 M bits DRAM
144	DVDDO	-	VDD for built-in 16 M bits DRAM. (2.4V)
145	DVSS1	-	GND for built-in 16 M bits DRAM.
146	DVDD1	-	VDD for built-in 16 M bits DRAM. (2.4V)
147	TST8	-	OPEN

■ MPC17A39DTB-X (IC400) : 4ch Bridge driver

1. Pin layout

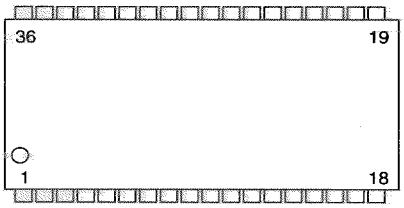

2. Block diagram

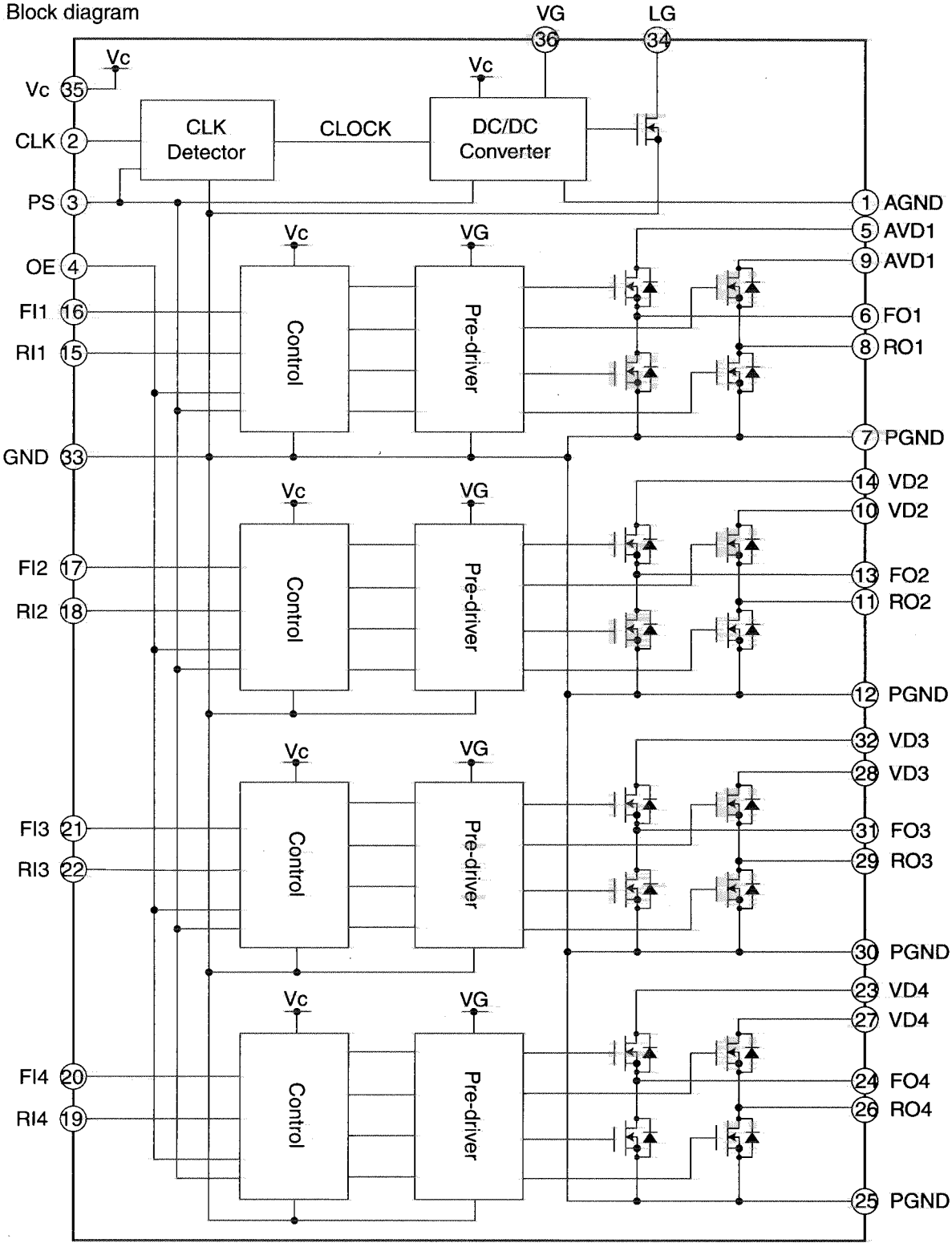

3. Pin function

Pin No.	Symbol	Function
1	AGND	DC/DC converter circuit ground terminal
2	CLK	External clock input terminal
3	PS	Standby mode control terminal
4	OE	Output enable terminal
5	VD1	Driver power supply terminal
6	FO1	Driver output terminal
7	PGND	Power ground terminal
8	RO1	Driver output terminal
9	VD1	Driver power supply terminal
10	VD2	Driver power supply terminal
11	RO2	Driver output terminal
12	PGND	Power ground terminal
13	FO2	Driver output terminal
14	VD2	Driver power supply terminal
15	RI1	Channel 1 control signal input terminal
16	FI1	Channel 1 control signal input terminal
17	FI2	Channel 2 control signal input terminal
18	RI2	Channel 2 control signal input terminal
19	RI4	Channel 4 control signal input terminal
20	FI4	Channel 4 control signal input terminal
21	FI3	Channel 3 control signal input terminal
22	RI3	Channel 3 control signal input terminal
23	VD4	Driver output terminal
24	FO4	Driver output terminal
25	PGND	Power ground terminal
26	RO4	Power ground terminal
27	VD4	Driver power supply terminal
28	VD3	Driver power supply terminal
29	RO3	Driver output terminal
30	PGND	power ground terminal
31	FO3	Driver output terminal
32	VD3	Driver power supply terminal
33	GND	Control circuit ground terminal
34	LG	DC/DC converter increased voltage inductance or diode connect terminal
35	VC	Control circuit power supply terminal
36	VG	Pre-driver circuit power supply terminal

■ JCV8002-W(IC851) : Head phone amp

1. Pin Layout

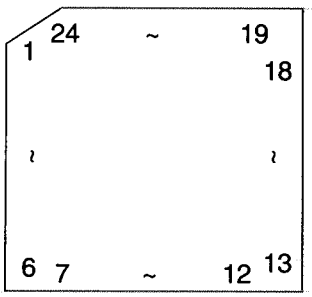

2. Block diagram

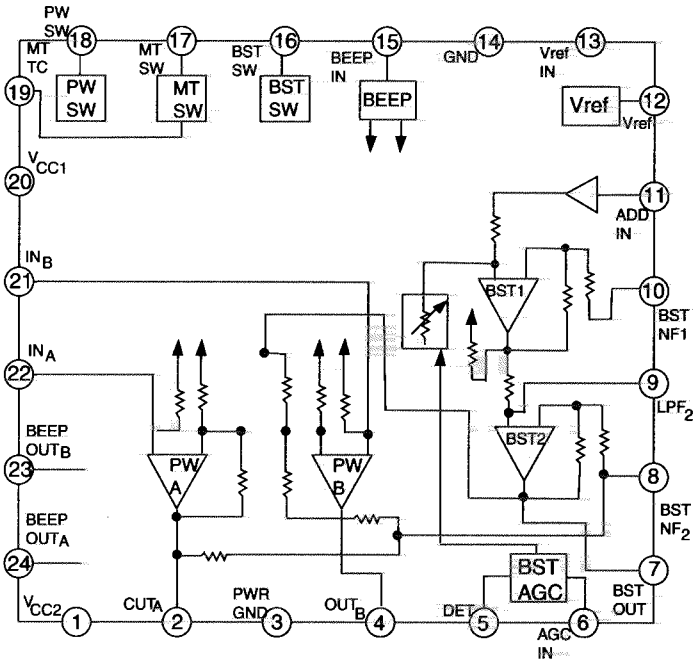

3. Pin function

Pin no.	Symbol	FUNCTION
1	V_{CC2}	V_{CC2} (+B) in power amplifier output steps
2	OUT_A	Power amplifier output
3	PWR GND	GND in power amplifier output steps
4	OUT_B	Power amplifier output
5	DET	Smoothness of level detection of boost AGC
6	AGC IN	BST amplifier input signal level variable control by input lever to boost AGC input terminal
7	BST OUT	Output terminal of BST amplifier2
8	BST NF_2	Terminal NF of BST amplifier2
9	LPF_2	Output BST amplifier1
10	BST NF_1	NF of BST amplifier1
11	ADD IN	ADD amplifier input
12	V_{ref}	Standard potential circuit
13	V_{ref}IN	Standard potential circuit
14	GND	Power part input steps GND
15	BEEP IN	Beep input terminal
16	BST SW	Beep output terminal
17	MT SW	Mute switch
18	PW SW	Power On/OFF switch
19	MT TC	Mute smoothing Power mute switch
20	V_{CC1}	Main parts V_{CC}
21	IN_B	Power amplifier input
22	IN_A	Power amplifier input
23	BEEP OUT_B	Beep output terminal
24	BEEP OUT_A	Beep output terminal

■ S-80822ANNP-W (IC504): Reset switch

1.Pin layout

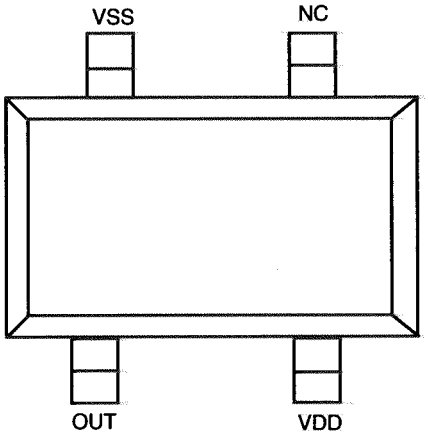

2.Block Daiagram

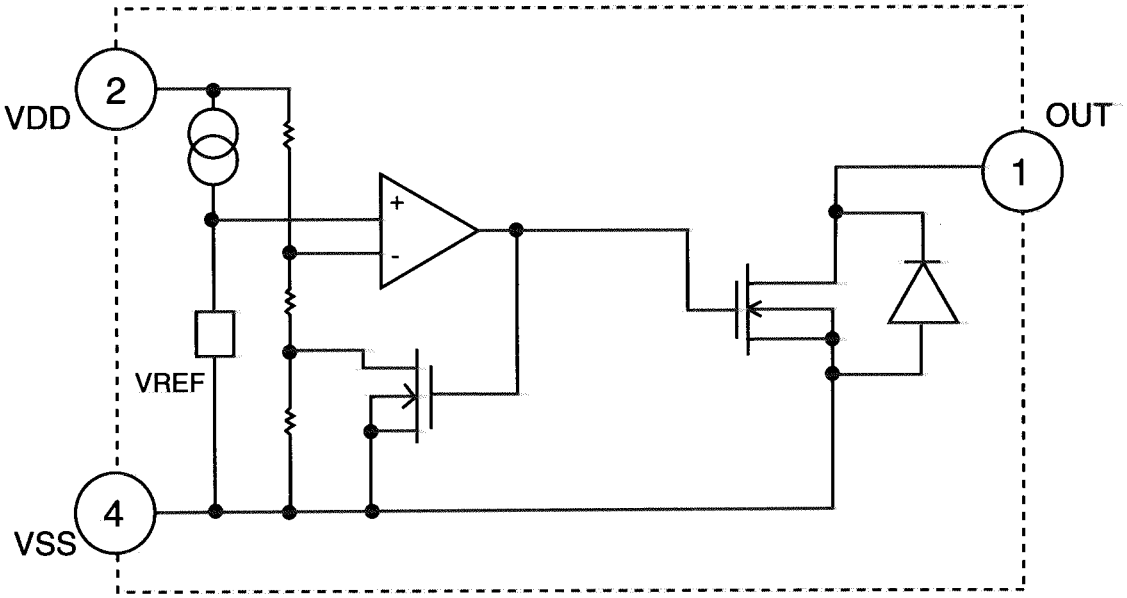

■ TC7S08FU-X (IC2) : 2Input and Gate

1.Pin Layout and Block Diagram

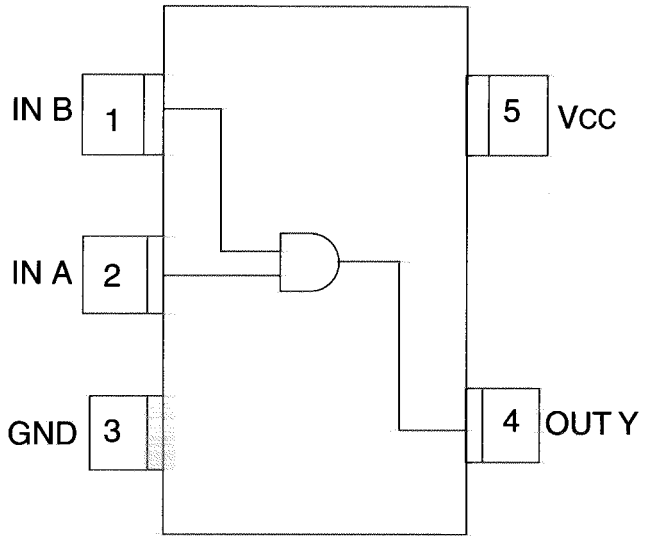

2.Function Truth Table

A	B	Y
L	L	L
L	L	L
H	L	L
H	H	H

■TK11223BMC-X (IC961) : Regulator

1. Pin layout

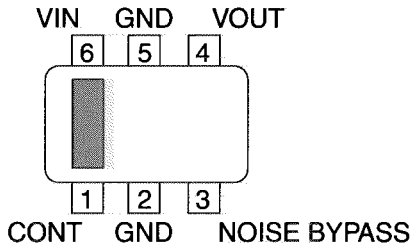

2. Block diagram

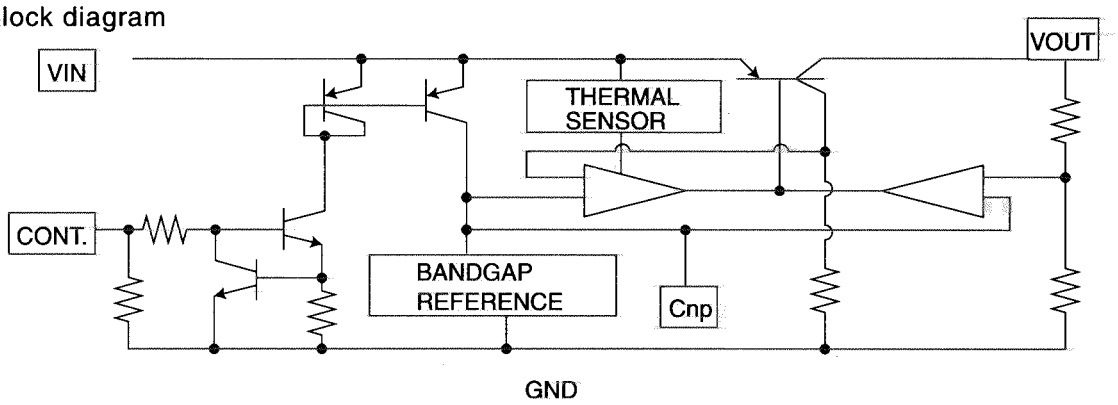

■ UPD784225GK-605(IC501) : CUP

1.Pin layout

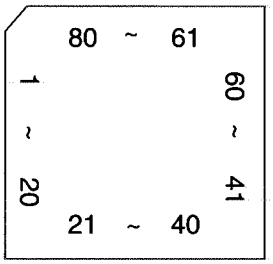

2.Function

Pin NO.	Symbol	Function	Pin NO.	Symbol	Function
1	ANI5	Connect to GND	41	-	No connected
2	ANI6	Connect to GND	42	-	No connected
3	SPSEL	No connected	43	-	No connected
4	AVSS	Connect to GND	44	-	Test terminal
5	ACB	Test terminal	45	-	Test terminal
6	-	No connected	46	-	No connected
7	AVREF1	Standard voltage for analog	47	RFVCTL	Test terminal
8	RMRX	Remote control data input terminal	48	PSAVE	No connected
9	RMTX	Remote control data output terminal	49	RPON	RP ON signal output terminal
10	-	No connected	50	DPON	DP ON signal output terminal
11	SRDT	Serial data reading input	51	REMOFF	Remote control OFF signal output terminal
12	SWDT	Serial data writing input	52	CS2	Chip select 2
13	SCLK	Serial bus clock output	53	SCL	Serial clock signal output terminal
14	-	No connected	54	DI	Data output terminal
15	BEEP	BEEP output	55	CS1	Chip select 1
16	PSW	Power ON/OFFoutput terminal	56	MNT0	Monitor 0 input terminal
17	MONDATA	Test terminal	57	MNT3	Monitor 3 input terminal
18	MONCLK	Test terminal	58	SENS	DSP internal state input terminal
19	XRST2	Standby setting output terminal	59	DO	Data input terminal
20	TG	Tracking gain setting terminal	60	RESET	Reset signal input terminal
21	-	No connected	61	XINT	Interrupt status input terminal
22	-	No connected	62	SQSY	Sync input terminal
23	XRST	Reset signal output	63	-	No connected
24	XLAT	Serial bus latch output	64	RPLY	Remote control play detection terminal
25	LVCTL	LSI Power supply control signal output	65	DOOR	Door open/close detection terminal
26	LDON	Laser diode ON signal output terminal	66	PLAYKEY	PLAY key detection terminal
27	RFOFF	RF OFF signal output terminal	67	VSS0	Connect to GND
28	SLOFF	SLED OFF signal output terminal	68	VDD1	Standard voltage terminal
29	-	No connected	69	X2	Connect to crystal oscillation
30	MUTE	Mute signal output terminal	70	X1	Connect to crystal oscillation
31	POWER	No connected	71	VPP	Test terminal
32	DIR	Test terminal	72	XT2	No connected
33	DSS1	Connects to GND	73	XT1	Connect to GND
34	PS	Standby mode output terminal	74	VDD0	Connect to GND
35	SS	Start/Stop output terminal	75	AVD0	Standard voltage terminal
36	MON1	Test terminal	76	KEY	Remote control stop key detection terminal
37	MON2	Test terminal	77	BATTERY	Battery voltage detection terminal
38	MONXLAT	Test terminal	78	TEMP	Connect to temperature detector
39	-	No connected	79	ANI3	Connect to GND
40	-	No connected	80	ANI4	Connect to GND

■ XC6367B101M-X (IC461 IC901 IC921 IC941): Regulator

1.Pin Layout

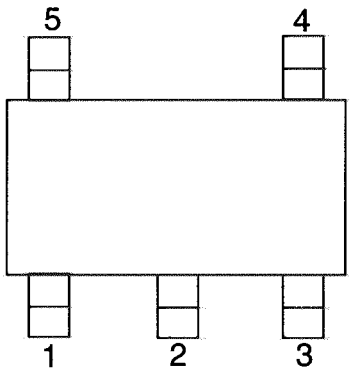

2.Function

Pin NO.	Symbol	Function
1	FB	Output voltage feed back input
2	VDD	Power supply
3	CE	Chip enable
4	GND	Ground
5	EXT	External transistor connection

3.Block Diagram

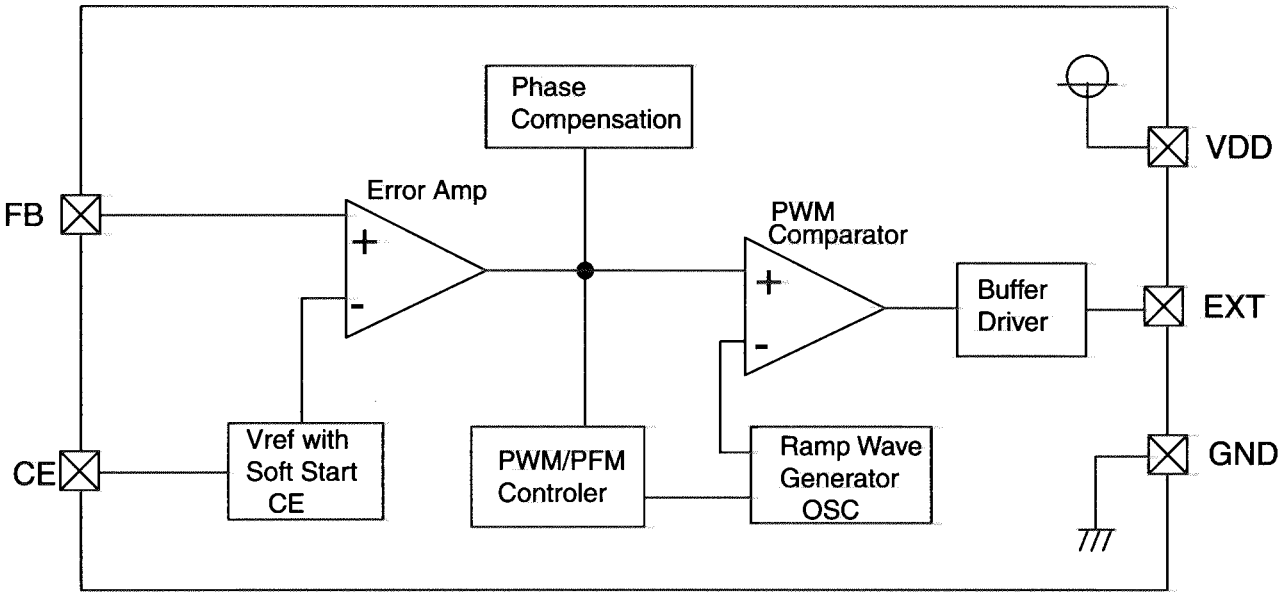

Block diagram

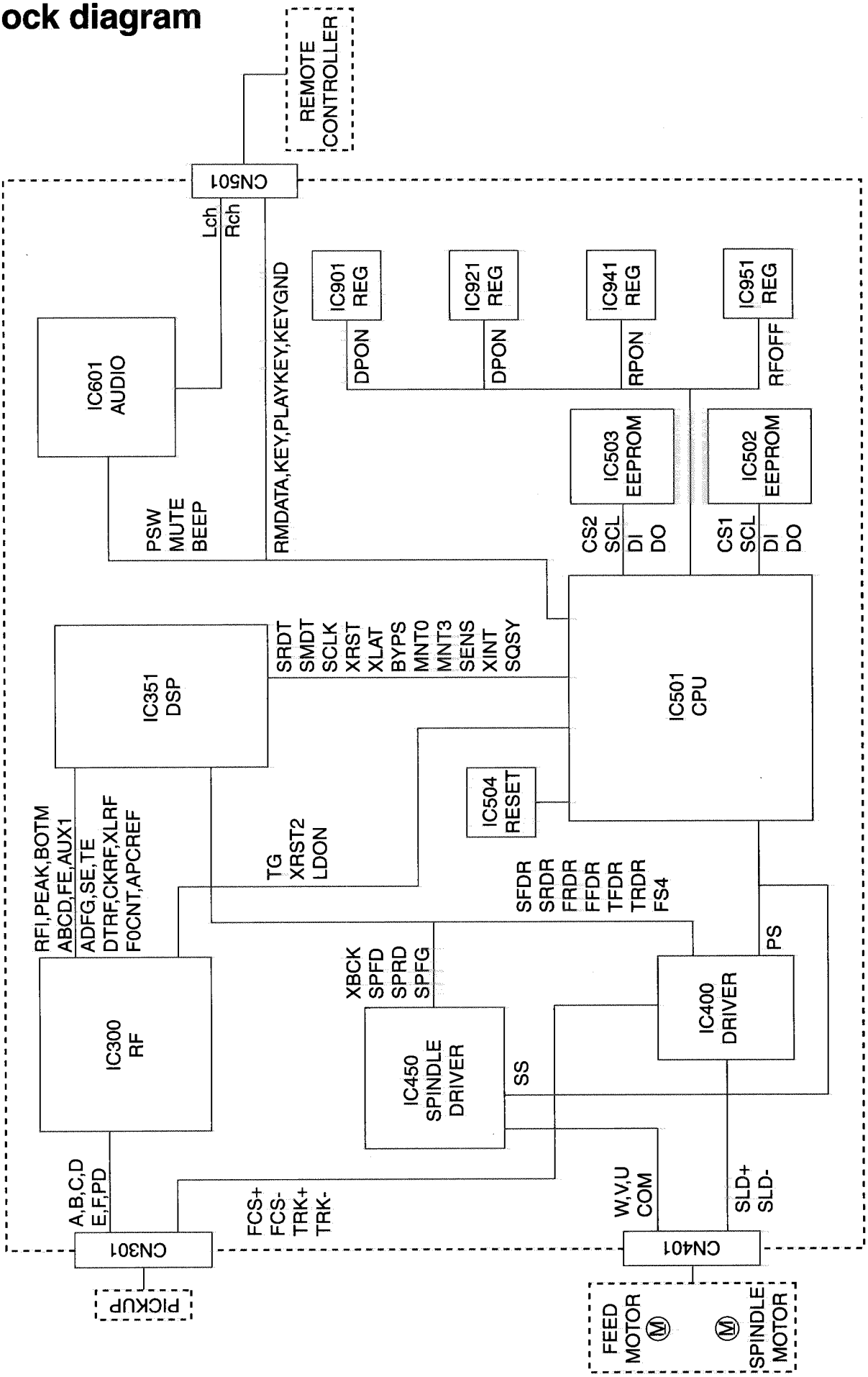

<<MEMO>>

Standard schematic diagram

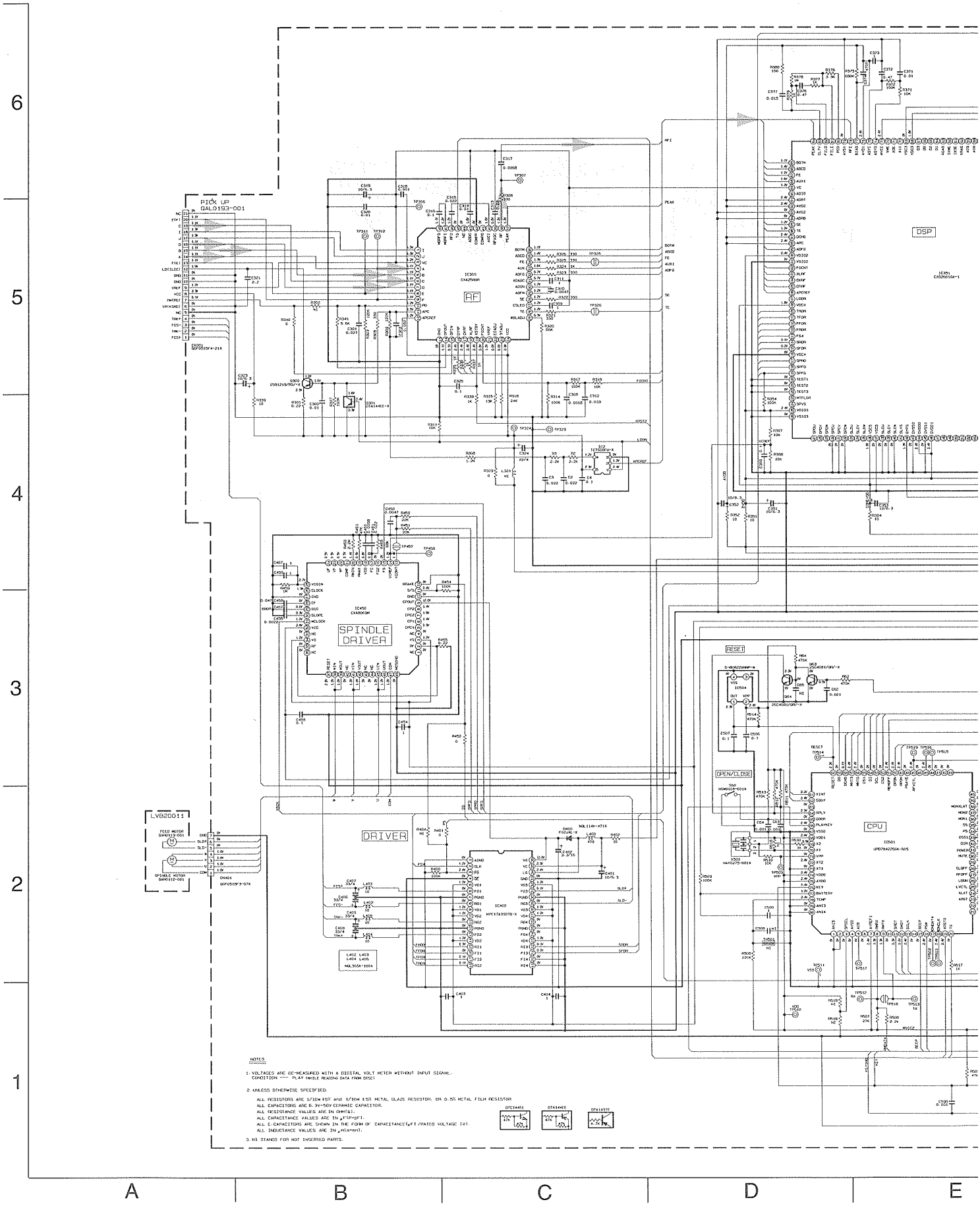

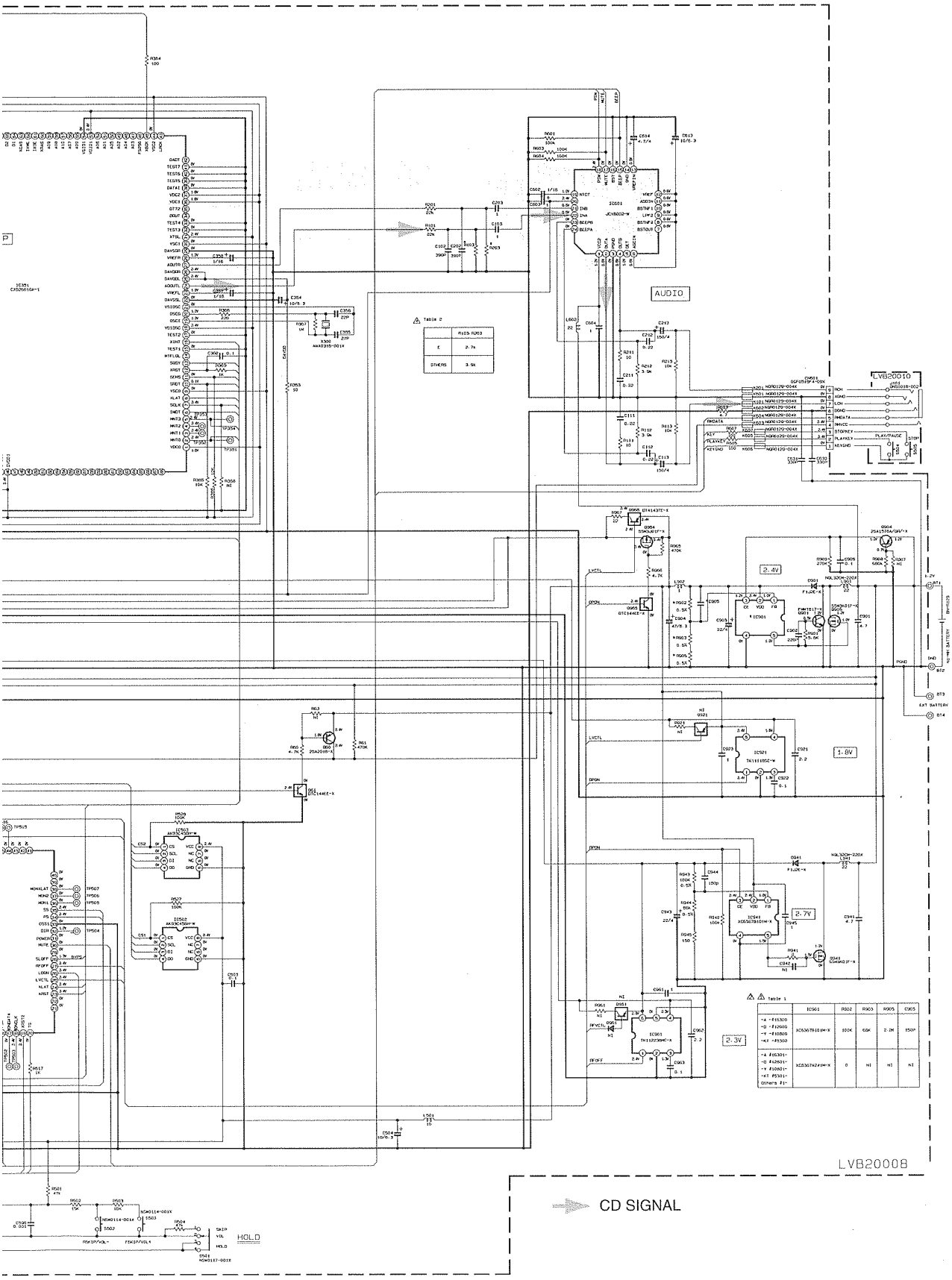
AUDIO
LVB20010
LVB20008
2.4V
1.8V
2.7V
2.3V
CD SIGNAL
HOLD
E
F
G
H
I

Printed circuit board

Main board (Forward side)

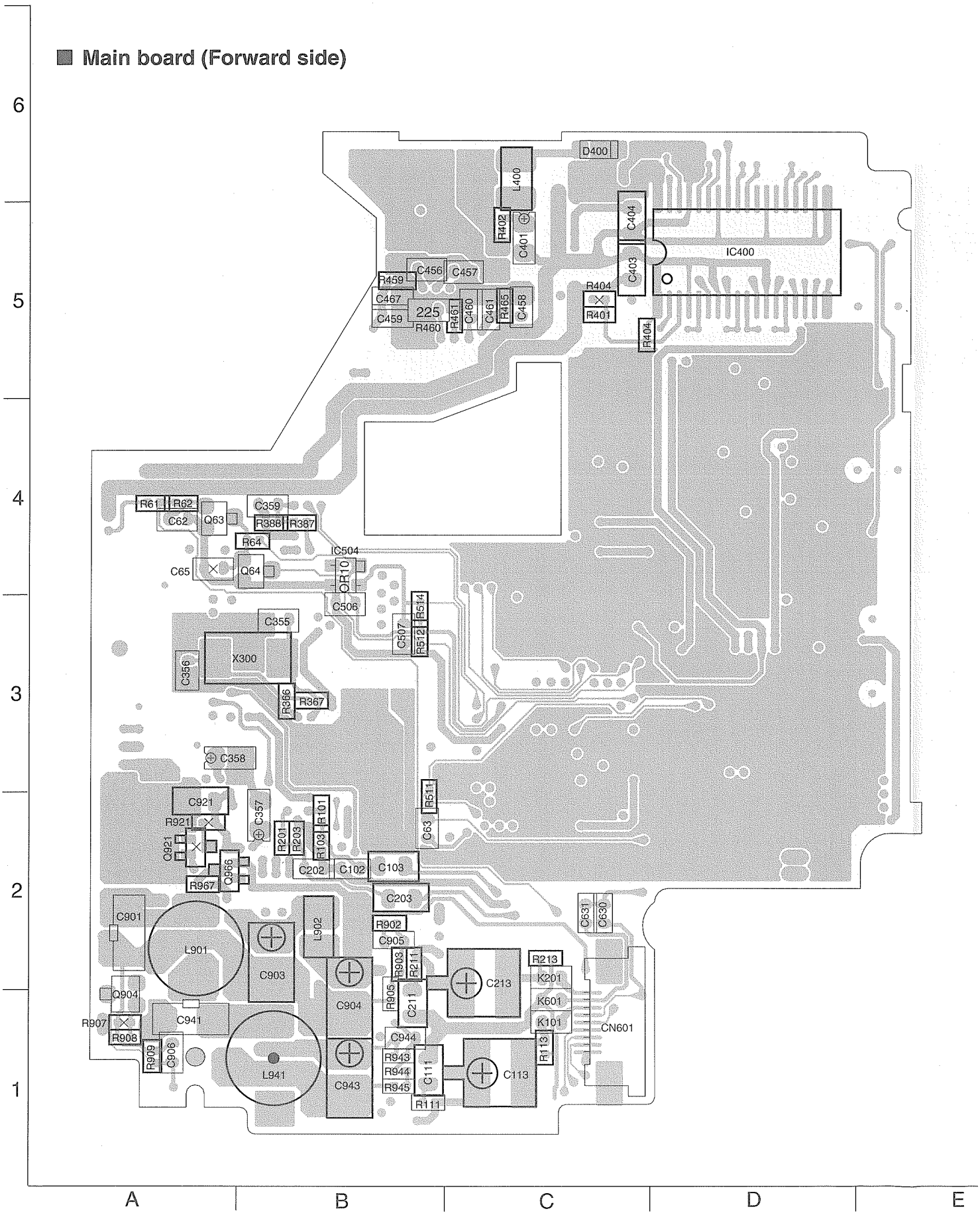

■ Main board (Reverse side)

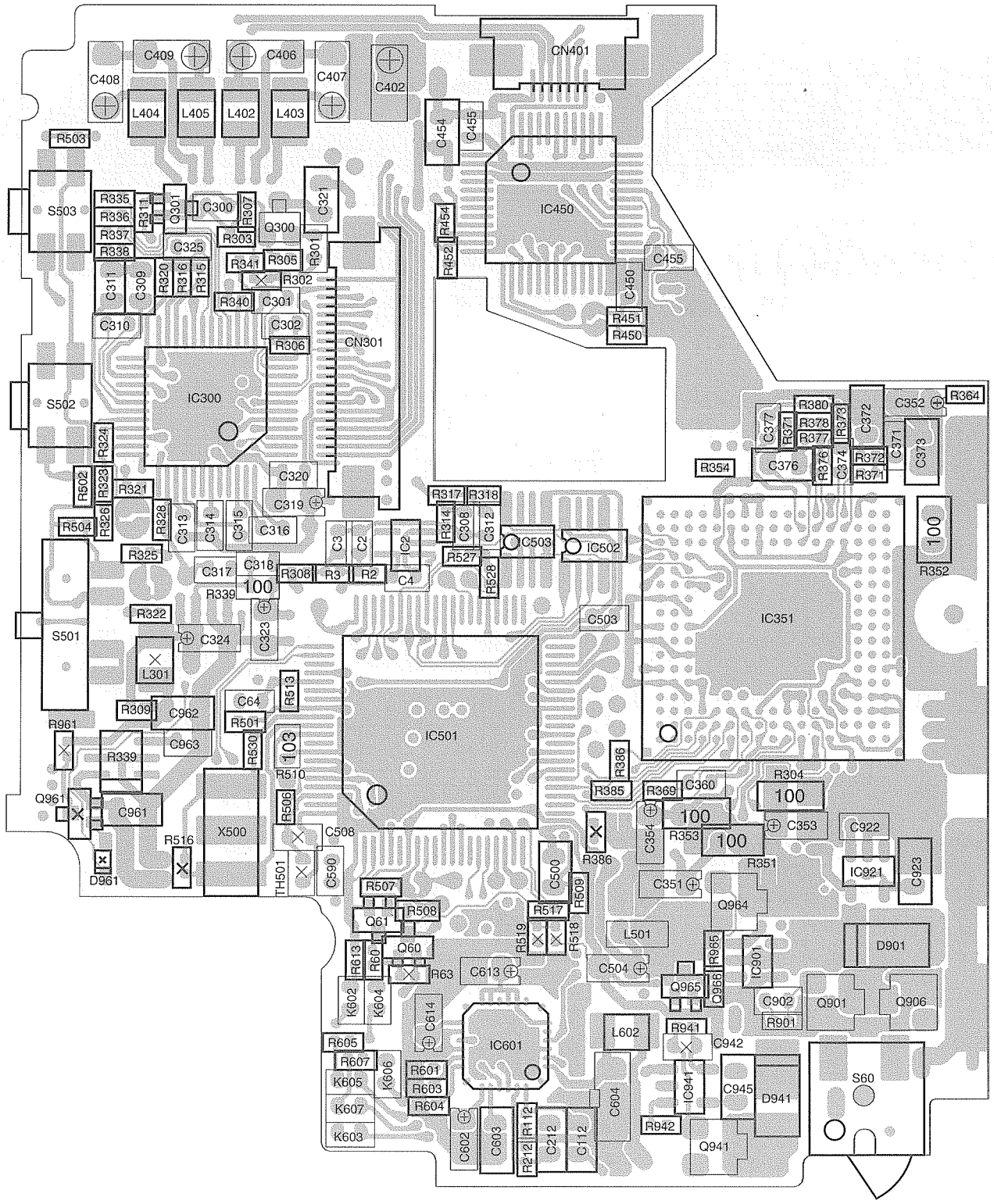

E	F	G	H	I

PARTS LIST

[XM-PX3BU]
[XM-PX3TG]

* All printed circuit boards and its assemblies are not available as service parts.

Areas suffix

UB ---------- Hong Kong

- Contents -

Exploded view of general assembly and parts list ---------- 3-2
MD mechanism assembly and parts list ---------- 3-4
Electrical parts list ---------- 3-5
Packing materials and accessories parts list ---------- 3-8

Exploded view of general assembly and parts list

Block No. M 1 M M

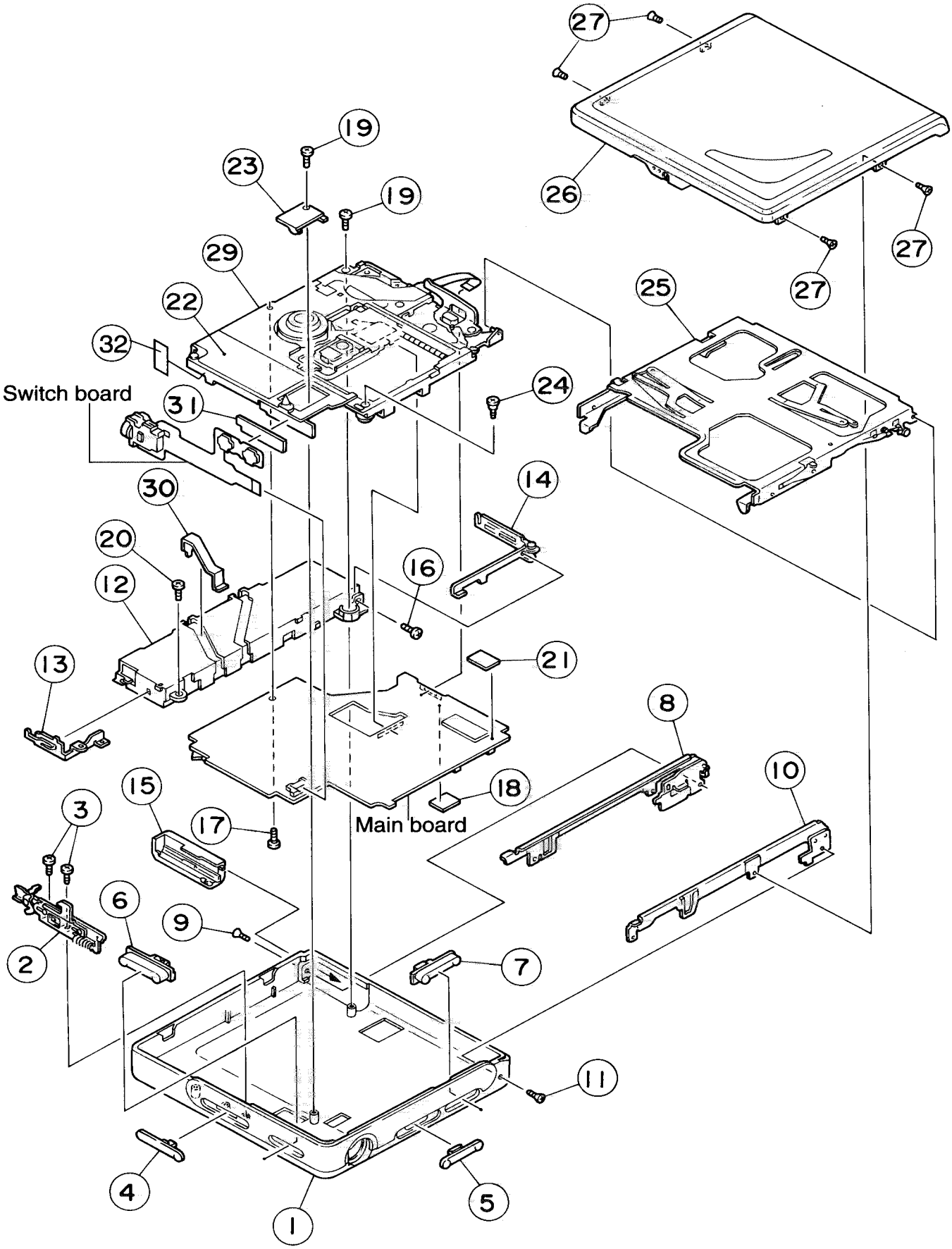

Parts list(General assembly)

Block No. **M1MM**

⚠	Item	Parts number	Parts name	Q'ty	Description	Area
⚠	1	LV20552-006A	BOTTOM CASE ASY	1	XM-PX3TG	
⚠		LV20552-005A	BOTTOM CASE ASY	1	XM-PX3BU	
	2	LV31804-001C	EJECT ASSY	1		
	3	LV41405-002A	MINI SCREW	2		
	4	LV31508-001A	EJECT KNOB	1		
	5	LV31509-001A	SELECT KNOB	1		
	6	LV31510-001A	PLAY BUTTON	1		
	7	LV31511-001A	VOL BUTTON	1		
	8	LV31515-001A	ARM(L) ASSY	1		
	9	LV41215-003A	MINI SCREW	1		
	10	LV31516-001A	ARM(R) ASSY	1		
	11	LV41215-003A	MINI SCREW	1		
	12	LV20472-004A	BATT HOLDER	1		
	13	LV31334-002A	BATT CONTACT(-)	1		
	14	LV31335-002A	B.CONTACT ASSY	1		
	15	LV31514-001A	BATTERY LID	1	XM-PX3BU	
		LV31514-002A	BATTERY LID	1	XM-PX3TG	
	16	VKZ4616-008	SCREW	1		
	17	QYSPSFT1425M	MINI SCREW	1		
	18	LV30225-054A	SPACER	1		
	19	QYSPSGU1435M	MINI SCREW	2		
	20	LV40241-001A	SPECIAL SCREW	1		
	21	LV30225-048A	SPACER	1		
	22	LV31339-003A	CAUTION LABEL	1		
	23	LV31513-001A	JACK COVER	1		
	24	QYSPSGU1435M	MINI SCREW	1		
	25	LV20468-001A	HOLDER ASS'Y	1		
	26	LV20550-006A	MD DOOR ASSY	1	XM-PX3TG	
		LV20550-005A	MD DOOR ASSY	1	XM-PX3BU	
	27	LV41215-003A	MINI SCREW	4		
	29	----------	MD MECHA	1		
	30	LV31333-004A	CHG.CONTACT(-)	1		
	31	LV41728-001A	SPACER	1		
	32	LV30225-064A	SPACER	1		

MD mechanism assembly and parts list

Block No. M 2 M M

FLM-JPM

Grease and screw lock
★ FG-87HS
● EBS0006-020B
Bond
◎ LOCK TIGHT 408

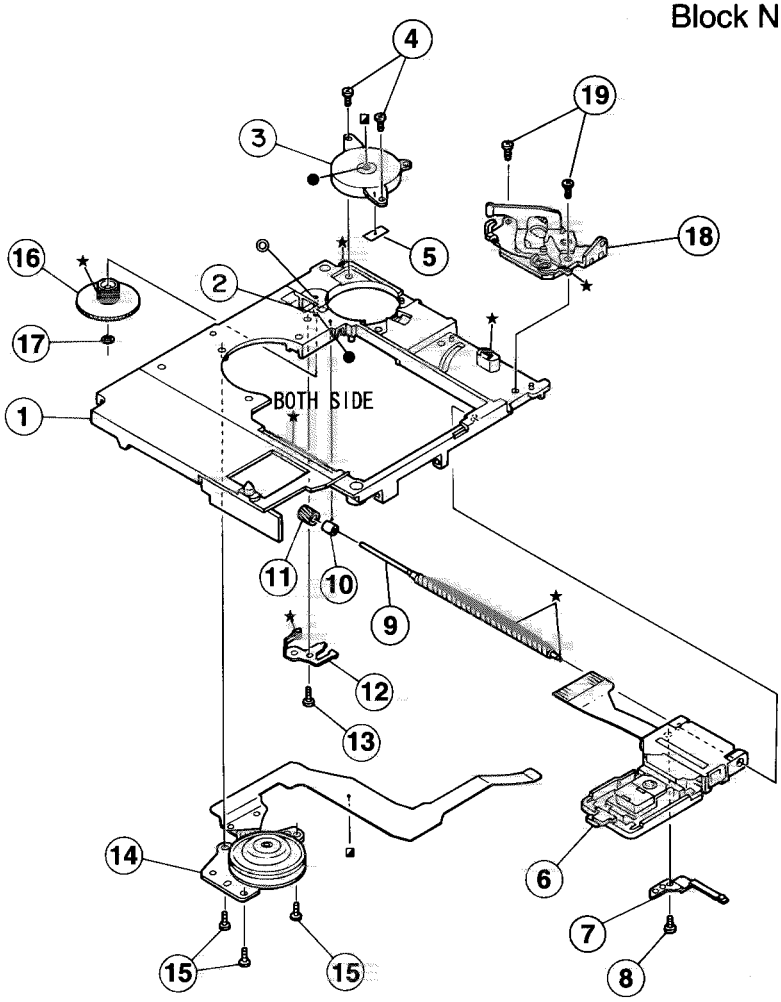

Parts list (MD mechanism)

Block No. M2MM

⚠	Item	Parts number	Parts name	Q'ty	Description	Area
	1	LV10252-001A	CHASSIS BASE	1		
	2	LV41128-001A	GEAR SHAFT	1		
	3	QAR0113-001	FEED MOTOR	1		
	4	QYSPSFT1425M	MINI SCREW	2		
	5	LV30225-015A	SPACER	1		
	6	QAL0193-001	PICK UP	1		
	7	LV41130-001A	LEAD SPRING	1		
	8	LV40501-001A	SPECIAL SCREW	1		
	9	LV31293-002A	LEAD SCREW	1		
	10	LV41132-001A	METAL	1		
	11	LV41133-001A	WHEEL GEAR	1		
	12	LV41134-002A	SHAFT HOLDER	1		
	13	QYSPSFT1425M	MINI SCREW	1		
	14	QAR0112-001	SPINDLE MOTOR	1		
	15	QYSPSFT1425M	MINI SCREW	3		
	16	LV41141-002A	WORM GEAR	1		
	17	WDM082520	SLIT WASHER	1		
	18	LV31294-001A	EJECT UNIT	1		
	19	QYSPSFT1425M	MINI SCREW	2		

Electrical parts list (Main board)

Block No. 01

⚠	Item	Parts number	Parts name	Remarks	Area
	C 2	NCB31EK-223X	C CAPACITOR		
	C 3	NCB31EK-223X	C CAPACITOR		
	C 4	NCB31CK-104X	C CAPACITOR		
	C 62	NCB31HK-102X	C CAPACITOR		
	C 63	NCB31HK-102X	C CAPACITOR		
	C 64	NCB31HK-102X	C CAPACITOR		
	C 102	NCS31HJ-391X	C CAPACITOR		
	C 103	NCB21AK-105X	C CAPACITOR		
	C 111	NCB21CK-224X	C CAPACITOR		
	C 112	NCB21CK-224X	C CAPACITOR		
	C 113	NBFA0GM-157X	TS E CAPACITOR		
	C 202	NCS31HJ-391X	C CAPACITOR		
	C 203	NCB21AK-105X	C CAPACITOR		
	C 211	NCB21CK-224X	C CAPACITOR		
	C 212	NCB21CK-224X	C CAPACITOR		
	C 213	NBFA0GM-157X	TS E CAPACITOR		
	C 300	NCB31HK-103X	C CAPACITOR		
	C 301	NCB31CK-273X	C CAPACITOR		
	C 302	NCB31CK-823X	C CAPACITOR		
	C 308	NCB31HK-682X	C CAPACITOR		
	C 309	NCB21AK-105X	C CAPACITOR		
	C 310	NCB31HK-472X	C CAPACITOR		
	C 311	NCB21AK-105X	C CAPACITOR		
	C 312	NCB31CK-333X	C CAPACITOR		
	C 313	NCB31AK-224X	C CAPACITOR		
	C 314	NCB31HK-103X	C CAPACITOR		
	C 315	NCB31EK-223X	C CAPACITOR		
	C 316	NCB31CK-104X	C CAPACITOR		
	C 317	NCB31HK-682X	C CAPACITOR		
	C 318	NCB31HK-102X	C CAPACITOR		
	C 319	NBE90JM-105X	TS E CAPACITOR		
	C 320	NCB31HK-103X	C CAPACITOR		
	C 321	NCB21AK-225X	C.CAPA. C.M		
	C 323	NBE90JM-105X	TS E CAPACITOR		
	C 324	NBE90GM-225X	TS E CAPACITOR		
	C 325	NCB31CK-104X	C CAPACITOR		
	C 351	NBE90JM-105X	TS E CAPACITOR		
	C 352	NBE90JM-105X	TS E CAPACITOR		
	C 353	NBE90JM-105X	TS E CAPACITOR		
	C 354	NBE90JM-105X	TS E CAPACITOR		
	C 355	NCS31HJ-270X	C CAPACITOR		
	C 356	NCS31HJ-220X	C CAPACITOR		
	C 357	NBE91CM-105X	E CAPACITOR		
	C 358	NBE91CM-105X	E CAPACITOR		
	C 359	NCB31CK-104X	C CAPACITOR		
	C 360	NCB31CK-104X	C CAPACITOR		
	C 371	NCB31HK-103X	C CAPACITOR		
	C 372	NCB21CK-474X	C CAPACITOR		
	C 373	NCB21AK-105X	C CAPACITOR		
	C 374	NCB31HK-471X	C CAPACITOR		
	C 376	NCB21CK-474X	C CAPACITOR		
	C 377	NCB31EK-153X	C CAPACITOR		
	C 401	NBE90JM-105X	TS E CAPACITOR		
	C 402	NBE21CM-335X	TS E CAPACITOR		
	C 403	NCB21AK-105X	C CAPACITOR		
	C 404	NCB21AK-105X	C CAPACITOR		
	C 406	NBE20GM-336X	TS E CAPACITOR		
	C 407	NBE20GM-336X	TS E CAPACITOR		
	C 408	NBE20GM-336X	TS E CAPACITOR		
	C 409	NBE20GM-336X	TS E CAPACITOR		
	C 450	NCB31HK-472X	C CAPACITOR		
	C 454	NCB21AK-105X	C CAPACITOR		
	C 455	NCB31CK-104X	C CAPACITOR		

⚠	Item	Parts number	Parts name	Remarks	Area
	C 456	NCB31HK-222X	C CAPACITOR		
	C 457	NCB31HK-681X	C CAPACITOR		
	C 458	NCB31CK-473X	C CAPACITOR		
	C 459	NCB30JK-105X	C CAPACITOR		
	C 460	NCB31HK-682X	C CAPACITOR		
	C 461	NCB31EK-223X	C CAPACITOR		
	C 467	NCB30JK-105X	C CAPACITOR		
	C 500	NCB21AK-105X	C CAPACITOR		
	C 503	NCB31CK-104X	C CAPACITOR		
	C 504	NBE90JM-105X	TS E CAPACITOR		
	C 506	NCB31CK-104X	C CAPACITOR		
	C 507	NCB31CK-104X	C CAPACITOR		
	C 590	NCB31HK-102X	C CAPACITOR		
	C 602	NBE91CM-105X	E CAPACITOR		
	C 603	NCB21AK-105X	C CAPACITOR		
	C 604	NCB11CK-105X	C CAPACITOR		
	C 613	NBE90JM-105X	TS E CAPACITOR		
	C 614	NBE90GM-475X	TS E CAPACITOR		
	C 630	NCB31HK-331X	C CAPACITOR		
	C 631	NCB31HK-331X	C CAPACITOR		
	C 901	NCB11AK-475X	C CAPACITOR		
	C 902	NCB31HK-221X	C CAPACITOR		
	C 903	NBG40GM-226X	TS E CAPACITOR		
	C 904	NBE40JM-476X	TS E CAPACITOR		
	C 906	NCB31CK-104X	C CAPACITOR		
	C 921	NCB21AK-225X	C.CAPA. C.M		
	C 922	NCB31CK-104X	C CAPACITOR		
	C 923	NCB21AK-105X	C CAPACITOR		
	C 941	NCB11AK-475X	C CAPACITOR		
	C 943	NBG40GM-226X	TS E CAPACITOR		
	C 944	NCB31HK-151X	C CAPACITOR		
	C 945	NCB21AK-105X	C CAPACITOR		
	C 961	NCB21AK-105X	C CAPACITOR		
	C 962	NCB21AK-225X	C.CAPA. C.M		
	C 963	NCB31CK-104X	C CAPACITOR		
	CN300	QGF0515F4-21X	FFC CONNECTOR	PICK	
	CN301	QGF0515F4-21X	FFC CONNECTOR	PICK	
	CN401	QGF0515F3-07X	FFC CONNECTOR	MECHA	
	CN601	QGF0515F4-09X	FFC CONNECTOR	HP	
	D 400	F02J4L-X	DIODE		
	D 901	F1J2E-X	DIODE		
	D 941	F1J2E-X	DIODE		
	IC 2	TC7S08FU-X	IC(DIGITAL)		
	IC300	CXA2588R	IC C.M		
	IC351	CXD2661GA-1	IC		
	IC400	MPC17A39DTB-X	IC		
	IC450	CXA8069M	IC		
	IC501	UPD784225GK-605	U-COM		
	IC502	AK93C45BH-W	IC		
	IC503	AK93C45BH-W	IC		
	IC504	S-80822ANNP-W	IC		
	IC601	JCV8002-W	IC		
	IC901	XC6367A241MR-X	IC		
	IC921	TK11118SC-W	IC		
	IC941	XC6367B101MR-X	IC		
	IC961	TK11223BMC-X	IC		
	J 101	QNS0098-002	3.5 JACK		
	K 101	NCR0129-004X	FERRITE BEADS		
	K 201	NCR0129-004X	FERRITE BEADS		
	K 601	NCR0129-004X	FERRITE BEADS		
	K 602	NCR0129-004X	FERRITE BEADS		
	K 603	NCR0129-004X	FERRITE BEADS		
	K 604	NCR0129-004X	FERRITE BEADS		

Electrical parts list (Main board)

Block No. 01

⚠	Item	Parts number	Parts name	Remarks	Area
	K 606	NQR0129-004X	FERRITE BEADS		
	K 607	NQR0129-004X	FERRITE BEADS		
	L 400	NQL114K-471X	INDUCTOR		
	L 402	NQL365K-100X	INDUCTOR		
	L 403	NQL365K-100X	INDUCTOR		
	L 404	NQL365K-100X	INDUCTOR		
	L 405	NQL365K-100X	INDUCTOR		
	L 501	NQL302N-100X	INDUCTOR		
	L 602	NQL365K-220X	INDUCTOR		
	L 901	NQL32CM-220X	INDUCTOR		
	L 902	NQL114M-1R0X	INDUCTOR		
	L 941	NQL32CM-220X	INDUCTOR		
	Q 60	2SA2018-X	TRANSISTOR		
	Q 61	DTC144EE-X	TRANSISTOR		
	Q 63	2SC4081/QR/-X	TRANSISTOR		
	Q 64	2SC4081/QR/-X	TRANSISTOR		
	Q 300	2SB1219/RS/-X	TRANSISTOR		
	Q 301	DTA144EE-X	DIGI TRANSISTOR		
	Q 901	FMMT617-X	TRANSISTOR		
	Q 904	2SA1576A/QR/-X	TRANSISTOR		
	Q 906	SSM3K01F-X	MOS FET		
	Q 941	SSM3K01F-X	MOS FET		
	Q 964	SSM3J01F-X	ET		
	Q 965	DTC144EE-X	TRANSISTOR		
	Q 966	DTA143TE-X	TRANSISTOR		
	R 2	NRSA6AJ-222W	MG RESISTOR		
	R 3	NRSA6AJ-222W	MG RESISTOR		
	R 60	NRSA6AJ-472W	MG RESISTOR		
	R 61	NRSA6AJ-474W	MG RESISTOR		
	R 62	NRSA6AJ-474W	MG RESISTOR		
	R 64	NRSA6AJ-474W	MG RESISTOR		
	R 101	NRSA6AJ-223W	MG RESISTOR		
	R 103	NRSA6AJ-272W	MF RESISTOR		
	R 111	NRSA6AJ-100W	MG RESISTOR		
	R 112	NRSA6AJ-392W	MF RESISTOR		
	R 113	NRSA6AJ-103W	MG RESISTOR		
	R 201	NRSA6AJ-223W	MG RESISTOR		
	R 203	NRSA6AJ-272W	MF RESISTOR		
	R 211	NRSA6AJ-100W	MG RESISTOR		
	R 212	NRSA6AJ-392W	MF RESISTOR		
	R 213	NRSA6AJ-103W	MG RESISTOR		
	R 301	NRZ0053-R22X	MG RESISTOR		
	R 303	NRSA6AJ-124W	MG RESISTOR		
	R 304	NRSA02J-100X	MG RESISTOR		
	R 305	NRSA6AJ-331W	MG RESISTOR		
	R 306	NRSA6AJ-124W	MG RESISTOR		
	R 307	NRSA6AJ-104W	MG RESISTOR		
	R 308	NRSA6AJ-122W	MG RESISTOR		
	R 311	NRSA6AJ-103W	MG RESISTOR		
	R 314	NRSA6AJ-104W	MG RESISTOR		
	R 315	NRSA6AJ-133W	MG RESISTOR		
	R 316	NRSA6AJ-243W	MG RESISTOR		
	R 317	NRSA6AJ-104W	MG RESISTOR		
	R 318	NRSA6AJ-103W	MG RESISTOR		
	R 320	NRSA6AJ-563W	MG RESISTOR		
	R 321	NRSA6AJ-331W	MG RESISTOR		
	R 322	NRSA6AJ-331W	MG RESISTOR		
	R 323	NRSA6AJ-331W	MG RESISTOR		
	R 324	NRSA6AJ-102W	MG RESISTOR		
	R 325	NRSA6AJ-331W	MG RESISTOR		
	R 326	NRSA6AJ-331W	MG RESISTOR		
	R 328	NRSA6AJ-101W	MG RESISTOR		
	R 335	NRSA6AJ-102W	MG RESISTOR		

⚠	Item	Parts number	Parts name	Remarks	Area
	R 336	NRSA6AJ-102W	MG RESISTOR		
	R 337	NRSA6AJ-102W	MG RESISTOR		
	R 338	NRSA6AJ-102W	MG RESISTOR		
	R 339	NRSA63J-100X	MG RESISTOR		
	R 341	NRSA6AJ-562W	MG RESISTOR		
	R 351	NRSA02J-100X	MG RESISTOR		
	R 352	NRSA02J-100X	MG RESISTOR		
	R 353	NRSA02J-100X	MG RESISTOR		
	R 354	NRSA6AJ-104W	MG RESISTOR		
	R 364	NRSA6AJ-101W	MG RESISTOR		
	R 366	NRSA6AJ-221W	MG RESISTOR		
	R 367	NRSA6AJ-105W	MG RESISTOR		
	R 369	NRSA6AJ-102W	MG RESISTOR		
	R 371	NRSA6AJ-103W	MG RESISTOR		
	R 372	NRSA6AJ-104W	MG RESISTOR		
	R 373	NRSA6AJ-684W	MG RESISTOR		
	R 376	NRSA6AJ-332W	MG RESISTOR		
	R 377	NRSA6AJ-102W	MG RESISTOR		
	R 378	NRSA6AJ-105W	MG RESISTOR		
	R 379	NRSA6AJ-102W	MG RESISTOR		
	R 380	NRSA6AJ-151W	MG RESISTOR		
	R 385	NRSA6AJ-103W	MG RESISTOR		
	R 386	NRSA6AJ-103W	MG RESISTOR		
	R 387	NRSA6AJ-103W	MG RESISTOR		
	R 388	NRSA6AJ-103W	MG RESISTOR		
	R 400	NRSA6AJ-104W	MG RESISTOR		
	R 402	NRSA6AJ-100W	MG RESISTOR		
	R 450	NRSA6AJ-223W	MG RESISTOR		
	R 451	NRSA6AJ-223W	MG RESISTOR		
	R 454	NRSA6AJ-104W	MG RESISTOR		
	R 455	NRZ0053-R22X	MG RESISTOR		
	R 459	NRSA6AJ-105W	MG RESISTOR		
	R 460	NRSA63J-225X	MG RESISTOR		
	R 461	NRSA6AJ-473W	MG RESISTOR		
	R 465	NRSA6AJ-683W	MG RESISTOR		
	R 501	NRSA6AJ-473W	MG RESISTOR		
	R 502	NRSA6AJ-153W	MG RESISTOR		
	R 503	NRSA6AJ-183W	MG RESISTOR		
	R 504	NRSA6AJ-473W	MG RESISTOR		
	R 506	NRSA6AJ-224W	MG RESISTOR		
	R 507	NRSA6AJ-273W	MG RESISTOR		
	R 508	NRSA6AJ-222W	MG RESISTOR		
	R 509	NRSA6AJ-104W	MG RESISTOR		
	R 510	NRSA63J-103X	MG RESISTOR		
	R 511	NRSA6AJ-474W	MG RESISTOR		
	R 512	NRSA6AJ-474W	MG RESISTOR		
	R 513	NRSA6AJ-474W	MG RESISTOR		
	R 514	NRSA6AJ-474W	MG RESISTOR		
	R 517	NRSA6AJ-102W	MG RESISTOR		
	R 527	NRSA6AJ-104W	MG RESISTOR		
	R 528	NRSA6AJ-104W	MG RESISTOR		
	R 530	NRSA6AJ-102W	MG RESISTOR		
	R 601	NRSA6AJ-104W	MG RESISTOR		
	R 603	NRSA6AJ-104W	MG RESISTOR		
	R 604	NRSA6AJ-104W	MG RESISTOR		
	R 605	NRSA6AJ-101W	MG RESISTOR		
	R 607	NRSA6AJ-101W	MG RESISTOR		
	R 613	NRSA6AJ-4R7W	MG RESISTOR		
	R 901	NRSA6AJ-562W	MG RESISTOR		
	R 908	NRSA6AJ-684W	MG RESISTOR		
	R 909	NRSA6AJ-274W	MG RESISTOR		
	R 942	NRSA6AJ-104W	MG RESISTOR		
	R 943	NRSA6AD-104W	MG RESISTOR		

Electrical parts list(Main board)

Block No. 01

⚠	Item	Parts number	Parts name	Remarks	Area
	R 944	NRSA6AD-563W	MG RESISTOR		
	R 945	NRSA6AJ-151W	MG RESISTOR		
	R 965	NRSA6AJ-474W	MG RESISTOR		
	R 966	NRSA6AJ-472W	MG RESISTOR		
	R 967	NRSA6AJ-220W	MG RESISTOR		
	S 60	NSW0108-001X	DETECT SWITCH		
	S 501	NSW0117-001X	SLIDE SWITCH		
	S 502	NSW0114-001X	TACT SWITCH		
	S 503	NSW0114-001X	TACT SWITCH		
	X 300	NAX0315-001X	CRYSTAL		
	X 500	NAX0275-001X	C OSCIALLATOR		

Electrical parts list (Switch board)

Block No. 02

⚠	Item	Parts number	Parts name	Remarks	Area
	J 101	QNS0098-002	3.5 JACK		
	S 504	NSW0059-001X	TACT SWITCH		
	S 505	NSW0059-001X	TACT SWITCH		

Packing materials and accessories parts list

Block No. M 4 M M

Block No. M 5 M M

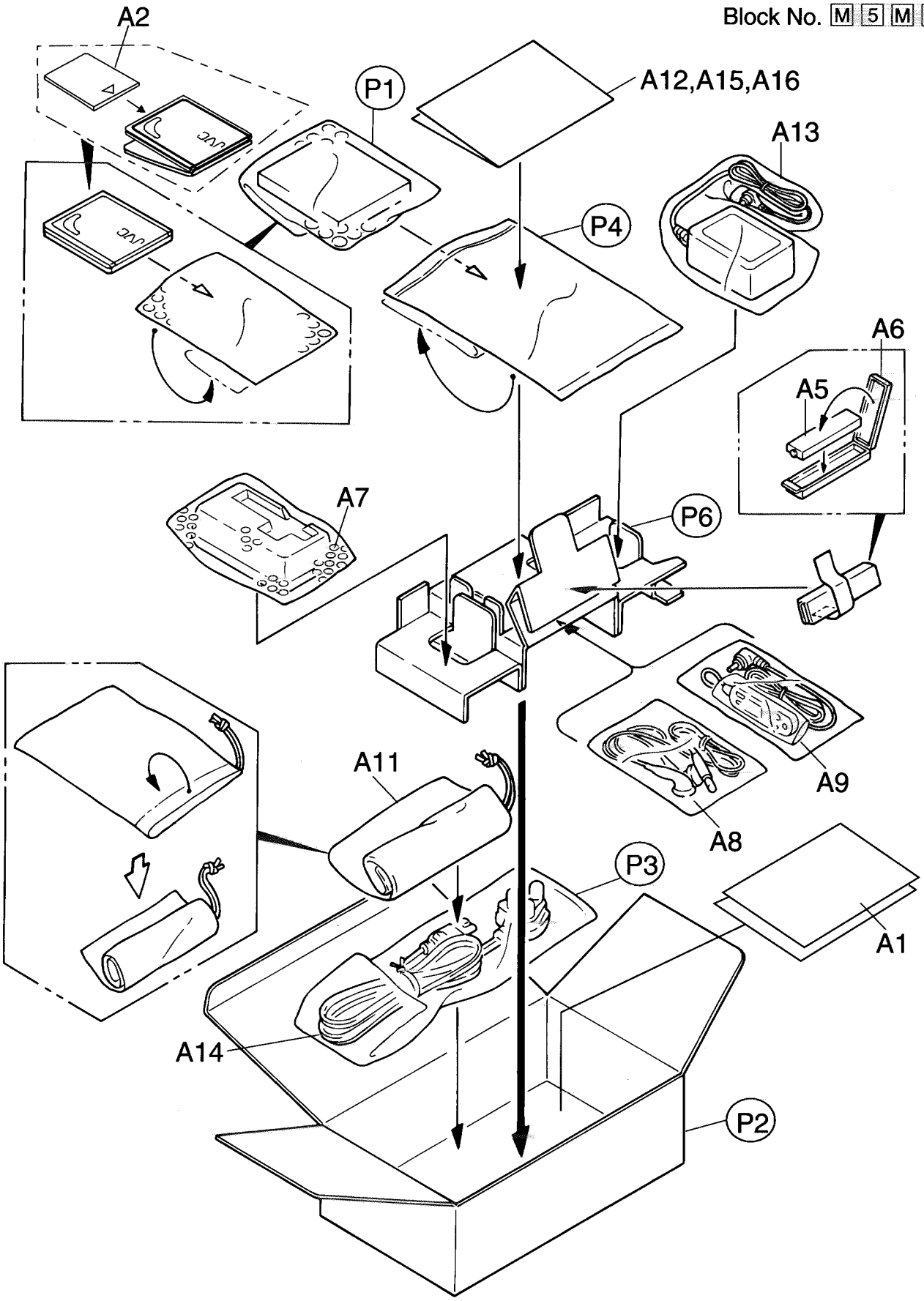

Packing parts list

Block No. **M3MM**

⚠	Item	Parts number	Parts name	Q'ty	Description	Area
	P 1	LV30245-003A	POLY BAG	1		
	P 2	LV31991-001A	CARTON	1	XM-PX3BU	
		LV31991-002A	CARTON	1	XM-PX3TG	
	P 3	QPA01503503	POLY BAG	1		
	P 4	LV31153-001A	BARRIER BAG	1		
	P 6	LV31930-002A	PAPER CUSHION	1		

Accessories list

Block No. **M4MM**

⚠	Item	Parts number	Parts name	Q'ty	Description	Area
⚠	A 1	LVT0488-007A	INST BOOK	1		
	A 2	LV31739-001A	MD SPACER	1		
⚠	A 5	QAB0024-004	NI-MH BATTERY	1		
	A 6	LV30791-001A	BATTERY CASE	1		
⚠	A 7	QAL0226-002	BATTERY CHAGER	1		
	A 8	QAN0021-003	HEAD PHONE	1	XM-PX3BU	
		QZN0021-004	HEAD PHONE	1	XM-PX3TG	
	A 9	QAL0211-006	REMOCON ASSY	1	XM-PX3TG	
		QAL0211-005	REMOCON ASSY	1	XM-PX3BU	
	A 11	LV31637-001A	SOFT CASE	1		
	A 12	LV41751-002A	CAUTION SHEET	1		
⚠	A 13	QAL0133-001	AC P ADAPTOR	1		
⚠	A 14	QMPP060-183-JD	POWER CORD	1		
	A 15	LV30258-050A	UB SHEET	1		
	A 16	LV31129-001A	CAUTION SHEET	1		

JVC

VICTOR COMPANY OF JAPAN, LIMITED
AUDIO DIVISION,10-1,1Chome,Ohwatari-machi,Maebashi-city,371-8543,Japan

No.20810

Printed in Japan
2000 02(O)